The object of the study: a system with a photovoltaic thermal hybrid solar collector.

The main problem addressed is to enhance the conversion and utilization efficiency of solar energy by developing a new design of photovoltaic thermal hybrid solar collector.

A computer model of the proposed design of a photovoltaic thermal hybrid solar collector (PVT) was developed, and its thermotechnical characteristics were investigated. Patterns of temperature changes in the heat transfer fluid in PVT and thermal accumulator over time of irradiation were determined. It is shown that the instantaneous thermal power of the solar collector was 540 W/m^2, and the efficiency was 0.6. Changes in the instantaneous specific thermal power of the system with PVT (up to 450 W/m^2) and its efficiency in heat accumulation in the accumulator (0.5) were studied. The high efficiency of PVT can be explained by its optimal design, which ensures simultaneous production of thermal and electrical energy, as well as balancing of the operation of the thermal and photovoltaic parts. The main difference between the developed model and existing analogs is the comprehensive consideration of the interaction of the thermal and photovoltaic parts in one installation. The model allows optimizing the PVT design to increase its efficiency. The research has allowed developing a new design of a photovoltaic thermal hybrid solar collector, which ensures high efficiency of conversion and utilization of solar energy.

The obtained results and the developed model provide a basis for further improvement of PVT and its implementation in power systems of buildings and technological processes to increase the share of solar energy utilization and reduce fossil fuel consumption

Keywords: power system, combined solar collector, alternative energy sources, photovoltaic solar collector

UDC 697.329

DOI: 10.15587/1729-4061.2024.304932

DEVELOPMENT OF A COMBINED SYSTEM WITH A HYBRID SOLAR COLLECTOR AND DETERMINATION OF ITS THERMAL CHARACTERISTICS

Stepan Mysak
PhD
Department of Heat Engineering and Thermal and Nuclear Power Plants*

Stepan Shapoval
Doctor of Technical Sciences, Professor
Department of Heat and Gas Supply and Ventilation*

Anna Hyvliud
Corresponding author
PhD, Associate Professor
Department of Ecological Safety and Nature Protection Activity*
E-mail: anna.m.hyvliud@lpnu.ua

*Lviv Polytechnic National University
S. Bandery str., 12, Lviv, Ukraine, 79013

Received date 01.03.2024
Accepted date 23.05.2024
Published date 28.06.2024

How to Cite: *Mysak, S., Shapoval, S., Hyvliud ,A. (2024). Development of a combined system with a hybrid solar collector and determination of its thermal characteristics. Eastern-European Journal of Enterprise Technologies, 3 (8 (129)), 45–54. https://doi.org/10.15587/1729-4061.2024.304932*

1. Introduction

The rising cost of traditional energy sources, the struggle for their deposits and wars, and environmental pollution are driving the increasing use of unconventional energy sources. Research on the development and improvement of hybrid solar collectors is extremely important in the context of the global challenges of climate change and the need to switch to renewable energy sources. The global scientific community and international organizations emphasize the urgent need to reduce greenhouse gas emissions and phase out traditional fossil fuels. Solar energy, in particular hybrid systems that combine photovoltaic and thermal conversion of solar radiation, has significant potential to provide a sustainable and environmentally friendly power supply.

The results of research on hybrid solar collectors are essential for practical application. They can improve the efficiency of solar energy use, reduce energy dependence on traditional sources, and cut heating and electricity costs for both residential and industrial facilities.

Hybrid solar collectors, combining photovoltaic and thermal technologies in a single system, are of considerable interest to researchers and developers in the field of renewable energy. These systems provide efficient use of solar radiation while generating electricity and heat, which increases their overall performance compared to separate photovoltaic or thermal solar systems.

Hybrid solar collectors can achieve an overall solar conversion efficiency of about 70–80 %, with a significant portion of this efficiency in the thermal part. However, the design and integration of these systems require careful balancing between thermal generation and optimization of the photovoltaic part to minimize energy losses and maximize overall performance.

One of the key advantages of hybrid solar collectors is their ability to provide a stable power supply even under changing weather conditions. According to the study, systems with hybrid collectors have shown significantly better adaptation to different climatic conditions compared to traditional photovoltaic or thermal systems.

Nevertheless, the implementation of hybrid solar collectors in practice faces a number of challenges, including the high cost of initiated investment and the complexity of integration into existing energy systems. Overcoming these

Copyright © 2024, Authors. This is an open access article under the Creative Commons CC BY license

challenges requires further research and development in materials, technologies, and system engineering.

Therefore, research on the implementation of hybrid solar collectors in practice, emphasizing the need to develop new materials for photovoltaic cells and heat exchangers, and optimize the design to improve the thermal power characteristics of such systems, is relevant. These studies also emphasize the need to develop integrated solutions to simplify the implementation of these systems in large-scale power grids.

2. Literature review and problem statement

Environmental issues have become extremely relevant, and the scientific community, in a number of reports and measures, recommends significantly increasing the use of renewable energy sources and gradually abandoning traditional fossil fuels. Although there is enough energy-efficient equipment and accurate ways to account for energy flows, as described in [1], special attention is still paid to the development of alternative energy. In particular, the Paris Agreement, which is a key international document in the field of climate change, is presented in [2]. It is shown that the agreement sets ambitious goals to significantly increase renewable energy use and phase out fossil fuels. To achieve these goals, it is necessary to actively develop alternative energy, in particular solar energy. However, issues related to optimizing and improving the efficiency of innovative installations in this area, such as hybrid solar collectors, remain unresolved. The reason for this may be objective difficulties due to the need to balance the thermal and photovoltaic parts of such systems to maximize their overall performance, as well as the limitations of existing technologies and materials.

The studies [3, 4] analyze European energy and climate strategies, which also emphasize the importance of increasing the share of renewable energy and reducing greenhouse gas emissions. These strategies set specific goals and mechanisms for achieving a sustainable energy future, but their implementation requires overcoming a number of technological and economic challenges. In particular, new approaches to the design and optimization of renewable energy installations are needed to increase their efficiency and reduce the cost.

In [5, 6], a thorough study of traditional flat-plate and evacuated-tube solar collectors was conducted. These technologies proved reliable and efficient, but have certain limitations. In particular, low heat transfer rates and the need for a large absorber area have been identified, which can reduce the overall performance of the system and complicate its integration into existing buildings and infrastructure. An option to overcome these difficulties can be the use of photovoltaic thermal hybrid solar collectors, which allow simultaneous generation of electricity and heat, as described in [7]. This approach makes it possible to use the collector area more efficiently and increase the overall system performance. However, the study [8] shows that existing hybrid collectors differ in design, efficiency, and testing methods, making them difficult to compare, optimize, and standardize.

This approach was used in [9], where a comprehensive evaluation and optimization of a hybrid flat-plate solar collector with a phase change material and a radiator was performed. The results showed a significant improvement in performance compared to conventional solutions, including an increase in the duration of hot water production and a decrease in the outlet temperature. However, the issues of optimal balancing of the thermal and photovoltaic components, as well as the selection of the most efficient phase change materials and radiator design, remain open. The reason for this may be difficulties in modeling and optimizing such multi-component systems, as well as the limited experimental data for different climatic conditions and operating modes.

The paper [10] considered technologies and systems of thermal energy storage for concentrating solar power plants. However, the peculiarities of their integration with photovoltaic thermal hybrid collectors were not considered. In [11], the authors conducted a dynamic analysis and feasibility study of a thermal energy storage system with a solar air heater for drying. However, they do not take into account the features of combined heat and power generation. The paper [12] considers various aspects of thermal energy storage systems for solar installations, including design methodologies, efficiency assessment, and integration with solar energy concentrators. It is shown that proper selection and optimization of the storage system can significantly increase the overall performance and reliability of a solar installation. However, the problems of optimizing the design and materials to improve integration with hybrid collectors remain unresolved. This may be due to insufficient knowledge of heat transfer and phase transitions in such combined systems, as well as difficulties in developing reliable and cost-effective solutions.

The study [13] shows the effectiveness of solar roofs in a gravity heating system. This is useful for passive systems, but does not consider active hybrid installations. The research [14] shows the theoretical and experimental analysis of a solar collector as part of an energy-efficient building. This is important for integration into buildings, but does not affect combined energy production. In [15], the use of energy-efficient building materials, in particular their combination with protective structures, combining them with hybrid solar collectors, is presented. Similarly, in [16], the authors developed engineering designs that can be useful for creating solar plant designs. Such solutions allow more efficient use of available space and reduce heat loss, but their practical implementation still faces a number of challenges. In particular, there is a lack of complete information for reliable calculation and design of such systems, which may be due to limited experimental data and the complexity of modeling combined thermal and electrical processes.

The paper [17] investigated the use of natural circulation in roof solar panels. This is useful for optimizing thermal processes, but the author does not consider the photovoltaic part. In [18], the authors conducted an experimental study of a multi-pass solar air collector with a thermal accumulator. This is important for increasing efficiency, but the given collector does not take into account electricity generation. The paper [19] presents an assessment of the optical efficiency of a concentrating solar collector. This work is relevant for the study of concentrators, but it does not affect hybrid systems. The study [20] reveals an experimental analysis of increasing the efficiency of photovoltaic panels with composite phase change materials. This is important in terms of temperature conditions, but the heat collector is not considered. These results are important for the optimization and design of solar systems, but do not fully take into account the specifics of hybrid photovoltaic-thermal solutions. The reason for this may be insufficient attention to the combined effects and synergies between the thermal and electrical components, as well as difficulties in developing unified approaches for different types of hybrid collectors.

The paper [21] reviews the methods of sealing commercial and advanced solar cells. This is important to ensure the

durability and reliability of photovoltaic converters, especially in difficult operating conditions. However, their combination with thermal collectors and the impact on the overall efficiency of hybrid systems are not considered. The source [22] indicates the active use of hybrid photovoltaic-thermal solar systems in the energy sector of leading countries and the constant improvement of their efficiency through research and development. In particular, the prospects for using new selective coatings for absorbers, which can significantly reduce heat losses and increase the performance of collectors, are shown. However, as noted in [23], the widespread adoption of such systems still faces a number of limitations and challenges. These include problems with inhomogeneous cooling of PV cells, limited energy conversion efficiency, high initial costs, and difficulties in integration with existing buildings and grids. The reason for this may be insufficiently advanced methods for balancing the thermal and photovoltaic parts, as well as the need to optimize the design, materials, and control systems for specific operating conditions. The study [24] modeled a hybrid solar heating system using artificial neural networks. This study can be used to predict and optimize system performance, but it does not reveal design details and experimental verification. In addition, neural network training may require a significant amount of data that is not always available.

An option to overcome these difficulties can be the use of computer modeling of a photovoltaic thermal hybrid solar collector with a flat absorber, as shown in [25]. This approach allows us to study heat transfer processes in detail, optimize the design and operating modes, and evaluate the technical and economic performance of the system. The modeling results show that hybrid flat absorber collectors can effectively store thermal and electrical energy and are more cost-effective than two separate systems. However, these studies do not fully take into account the possibility of using a solar concentrator to further improve the performance and efficiency of the system.

All this suggests that it is appropriate and relevant to conduct a comprehensive study on the development and optimization of a photovoltaic thermal hybrid solar collector with a concentrator, as well as an experimental study of its characteristics in combination with a thermal accumulator. This approach will combine the advantages of solar energy concentration with efficient accumulation and use of heat, which can significantly increase the overall performance and technical and economic indicators of the system. The obtained results and developed methods can be used in the design of high-efficiency hybrid solar systems of a new generation, which can make a significant contribution to the achievement of sustainable development goals and the fight against climate change [26]. In addition, the introduction of such systems will reduce fossil fuel consumption, reduce harmful emissions, and improve the environmental situation both locally and globally.

3. The aim and objectives of the study

The aim of the study is to develop an improved design of a photovoltaic thermal hybrid solar collector. This will make it possible to create a methodology for calculating and designing power systems with this type of solar collectors.

To achieve this aim, the following objectives were set:

– to create a computer model of the developed photovoltaic thermal hybrid solar collector;

– to study the thermal characteristics of the proposed PVT design.

4. Material and methods

The object of the study: a system with a photovoltaic thermal hybrid solar collector.

The main hypothesis of the study is that the use of PVT will increase the efficiency of solar energy use by simultaneously generating heat and electricity, as well as optimizing the processes of energy storage and transmission.

The following assumptions were made in the study:

– the geometric model of PVT adequately reflects the actual design of the collector, taking into account its main elements and their location;

– the properties of the materials used in the model correspond to the actual characteristics of the PVT components;

– the boundary conditions and environmental parameters set in the model correspond to standard operating conditions of PVT.

To simplify the model and reduce the calculation time, the following simplifications were made:

– minor design elements of PVT that have no significant impact on its thermal and electrical characteristics were excluded from the model;

– thermal contacts between the PVT elements were considered ideal, excluding the thermal resistance of the contacts;

– the optical properties of the PVT surfaces were assumed constant and independent of the angle of incidence of solar radiation.

The study of the system with PVT was carried out using computer modeling and numerical experiments. To create a computer model of the system, the SolidWorks 2022 software (France) with the Flow Simulation module was used.

The geometric model of PVT was developed in the SolidWorks software environment, taking into account design features such as dimensions, materials and arrangement of elements. The photovoltaic part of the collector was modeled using monocrystalline silicon solar cells, and selective coated copper tubes were used for the thermal part.

The adequacy of the developed model and the results obtained was confirmed by comparing them with the conclusions of known scientific provisions and experimental data. The results of the study do not contradict existing scientific theories and practical observations. The conclusions and recommendations formulated as a result of this study were obtained through careful analysis, generalization and systematization of data obtained during numerical experiments using the developed computer model of PVT.

5. Results of studying the thermal characteristics of the proposed design of a photovoltaic thermal hybrid solar collector

5. 1. Creation of a computer model of the developed photovoltaic thermal hybrid solar collector

Combined power system with a photovoltaic thermal hybrid solar collector without protective glass and with a heat exchanger in the thermal accumulator.

Fig. 1 shows a computer model of the system with the proposed design of a photovoltaic thermal hybrid solar collector (PVT CPS). This system also contains a thermal accumulator TA with a heat exchanger. In this system, the heat transfer fluid from the thermal accumulator 3 enters the photovoltaic thermal part of PVT through pipeline 1 and from it enters the thermal part with solar radiation concentrators

and then through pipeline 4 to TA. Circulation is carried out by means of a circulation pump.

The computer model of the developed design of PVT CPS consists of two separate units – TA 8 and PVT, which consists of a photovoltaic panel and a thermal solar collector, and is designed to produce heat and electricity. The incident solar radiation on the thermal solar collector is focused in seven concentrators, which are side-by-side aluminum 0.5 mm thick plates with a parabolic shape. They concentrate the sunlight reflected from their walls onto copper tubes 21 with a diameter d=10 cm and a wall thickness of 0.5 mm placed along their axes at a distance L=15 cm from each other extending along the flow of the heat transfer fluid.

The heated heat transfer fluid flows through the distribution comb 23, the temperature of which is measured by the sensor 24, in the copper pipeline 17 with a diameter D=25 mm and a wall thickness of 0.5 mm to TA 8. It transfers heat through the copper tubular heat exchanger 10 with a length of 9.06 m, diameter D=25 mm and wall thickness of 0.5 mm to TA heat transfer fluid that washes it. TA is a cylindrical closed tank with a diameter of 364 mm, length of 1,004 mm and volume V_{TA}=100 liters, made of 2 mm thick steel sheets.

To measure the average temperature of the heat transfer fluid in TA 8, the entire filled tank volume was conditionally divided into three layers of equal height. In the central plane of each layer, the temperature is measured by an arc temperature sensor made of 4 mm thick glass. It measures the average temperature at four points on the body.

The cooled heat transfer fluid is transported through the copper pipeline 14 with a diameter D=25 mm and a wall thickness of 0.5 mm through the distribution comb 16 to the photovoltaic panel, where it is heated by photocells 19 and enters the thermal solar collector.

The heat transfer fluid in the system, which is water, is moved by the circulation pump 13, which provides a flow rate of 0.03 kg/s.

To generate electricity, 36 silicon photovoltaic cells with dimensions of 155×155 mm and a thickness of 0.3 mm are attached to the copper plate of the photovoltaic panel. To increase the efficiency of the photocells and remove heat from them, the copper plate of the photovoltaic panel is connected to the copper tubes of the CPS circuit.

5. 2. Investigation of the thermal characteristics of the proposed design of a photovoltaic thermal hybrid solar collector

The studies were carried out in SolidWorks 2022 (France) using the Flow Simulation module under steady-state conditions. At an ambient temperature $t_{env.}$=15 °C and solar radiation intensity I_T=900 W/m^2, taking into account that solar radiation was received at a right angle to the solar collector plane.

Fig. 2 shows the thermographic visualization of a hybrid solar collector undergoing the thermal simulation process at the end of the experiment on the 5,400th second, i.e. the time sufficient to achieve a quasi-stationary thermal mode of the system.

Fig. 3 shows the temperature field in the section of the photovoltaic part of a photovoltaic thermal hybrid solar collector with a thermal accumulator at the end of the experiment.

The temperature field in the longitudinal section of a photovoltaic thermal hybrid solar collector with a thermal accumulator at the end of the experiment is shown in Fig. 4.

According to experimental studies, temperature changes in the heat transfer fluid in PVT are shown in Fig. 5.

Next, we studied temperature changes in the heat transfer fluid in TA, which are shown in Fig. 6.

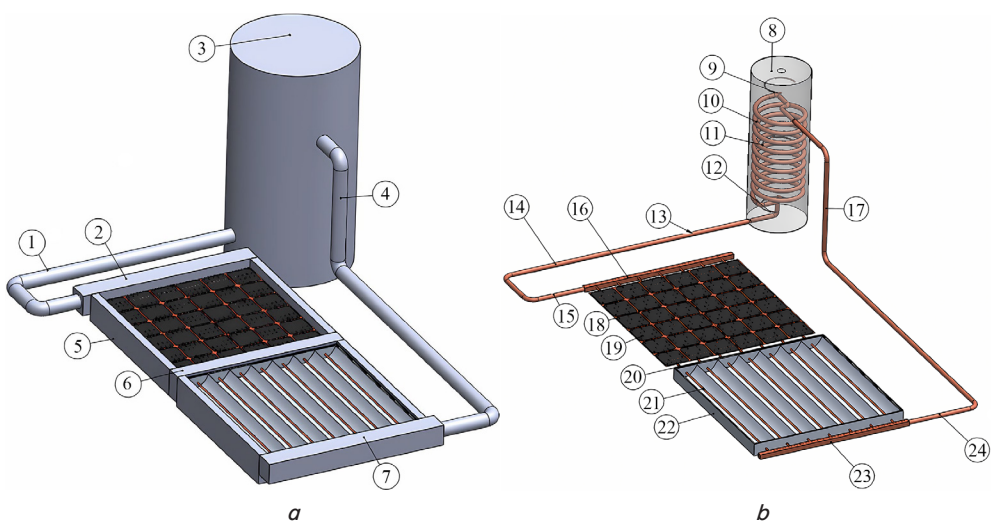

Fig. 1. Schematic of the computer model of the system with the proposed design of a photovoltaic thermal hybrid solar collector without protective glass with a copper heat exchanger in the thermal accumulator: 1, 4 – insulation of pipelines at the inlet and outlet of the photovoltaic thermal hybrid solar collector; 2, 7 – insulation of the distribution combs of the heat transfer fluid at the inlet to the photovoltaic panel and at the outlet of the thermal solar collector; 3 – insulation of the thermal accumulator; 5 – insulation of the photovoltaic panel; 6 – insulation of the heat separator; 8 – thermal accumulator; 9, 11, 12 – temperature sensors of the heat transfer fluid in the thermal accumulator in the heat supply system circuit; 10 – copper heat exchanger; 13 – circulation pump; 14, 17 – pipeline at the inlet and outlet of the photovoltaic thermal hybrid solar collector; 15, 24 – temperature sensors of the heat transfer fluid in the pipelines at the inlet and outlet of the photovoltaic thermal hybrid solar collector; 16, 23 – distribution combs of the heat transfer fluid at the inlet to the photovoltaic panel and at the outlet of the thermal solar collector; 18 – copper plate; 19 – solar panel photocells; 20 – heat separator; 21 – copper tube of the concentrator; 22 – insulation of the thermal solar collector

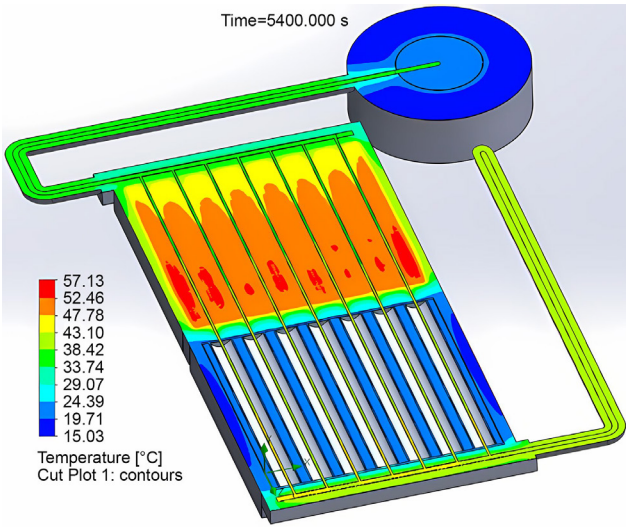

Fig. 2. Temperature field on the surface of a photovoltaic thermal hybrid solar collector with a thermal accumulator at the end of the experiment

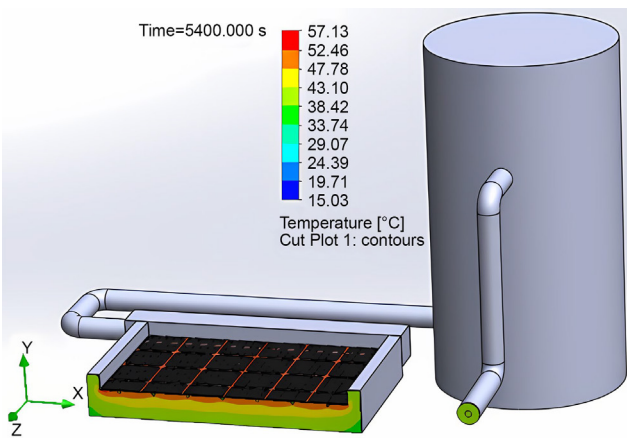

Fig. 3. Temperature field in the section of the photovoltaic part of a photovoltaic thermal hybrid solar collector with a thermal accumulator at the end of the experiment

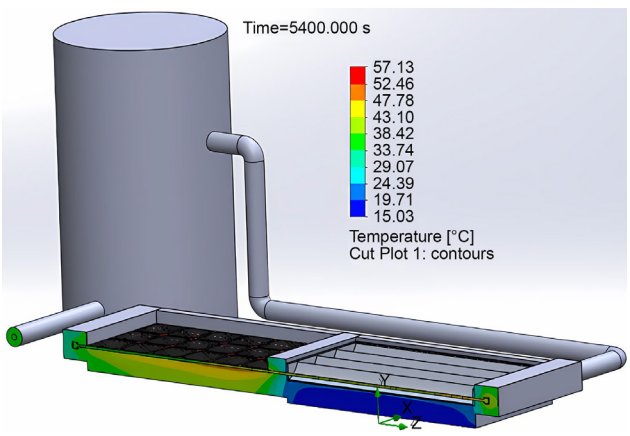

Fig. 4. Temperature field in the longitudinal section of a photovoltaic thermal hybrid solar collector with a thermal accumulator at the end of the experiment

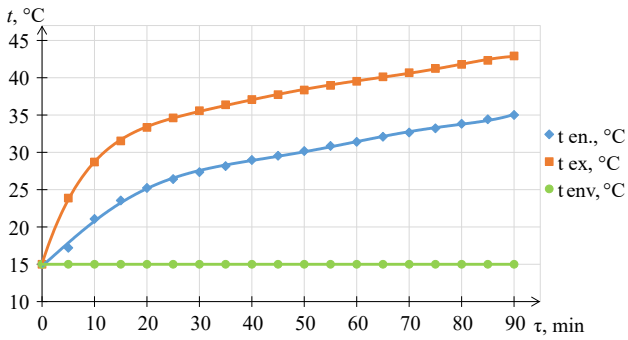

Fig. 5. Temperatures of the heat transfer fluid in the pipeline at the inlet t_{en}, °C, at the outlet t_{ex}, °C, of the photovoltaic thermal hybrid solar collector and the environment t_{env}, °C

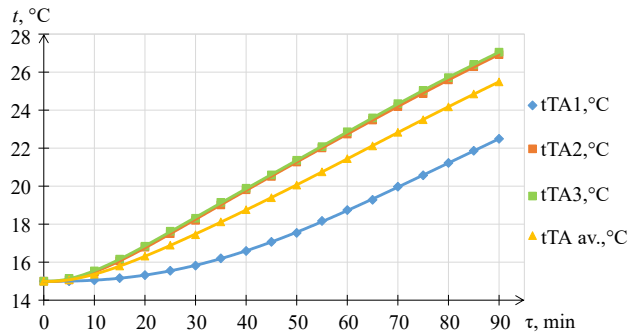

Fig. 6. Temperatures of the heat transfer fluid in the thermal accumulator, °C, depending on the time of the experiment τ, min

Next, we determined the temperature increase in the heat transfer fluid in PVT and TA.

Fig. 7 shows no change in the ambient temperature $\Delta t_{env.}$, the temperature growth in the heat transfer fluid in the pipeline at the PVT outlet Δt_{ex} rapidly increases to 18 °C in the first 20 min of the experiment, and then, increasing evenly, reaches 28 °C at the end of the study.

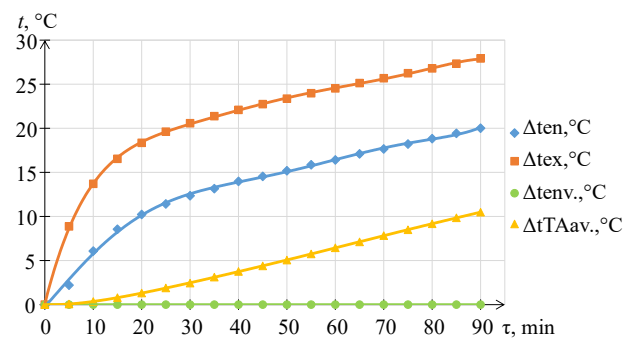

Fig. 7. Temperature increase of the heat transfer fluid in the pipeline at the inlet Δt_{en}, °C, at the outlet Δt_{ex}, °C, of the photovoltaic thermal hybrid solar collector with a thermal accumulator Δt_{TAav}, °C, and the environment $\Delta t_{env.}$, °C

From the analysis of the results of computer modeling of PVT CPS, instantaneous values of the specific power of PVT were calculated. The change in the thermal efficiency of PVT during the experiment was also calculated. In addition, the instantaneous specific power of PVT CPS and the thermal efficiency of PVT CPS during the experiment were calculated.

The instantaneous values of the specific thermal power of PVT Q_{PVT} during the experiment were determined by the formula:

$$Q_{PVT} = c_w G\left(t_{ex} - t_{en}\right) / A_{PVT}, \text{W/m}^2, \quad (1)$$

where c_w=4187 J/(kg·°C) is the specific heat capacity of the heat transfer fluid (water); G is the flow rate of the heat transfer fluid in PVT CPS, kg/s; t_{ex} is the average temperature of the heat transfer fluid in the pipeline at the PVT outlet, °C; t_{en} is the average temperature of the heat transfer fluid at the PVT inlet, °C; A_{PVT} is the PVT area, m^2.

The instantaneous values of the specific power of PVT are shown in Fig. 8.

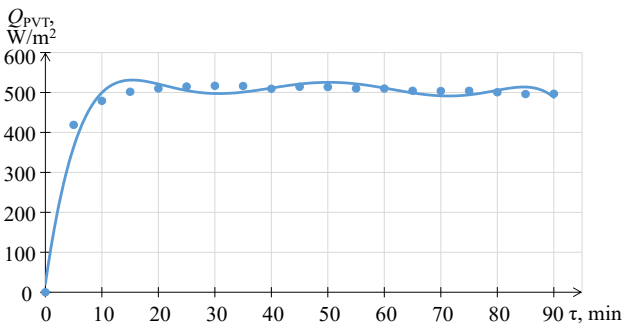

Fig. 8. Instantaneous specific thermal power of a photovoltaic thermal hybrid-solar collector Q_{PVT}, W/m^2

The instantaneous specific thermal power of PVT Q_{PVT}, W/m^2, depending on time τ, min, after statistical processing and exclusion of insignificant coefficients of the terms is approximately determined by the formula:

$$Q_{PVT} = 0.0041\tau^4 + 0.2374\tau^3 - \\ -7.032\tau^2 + 98.192\tau + 20.862, \text{W/m}^2. \quad (2)$$

The thermal efficiencies of PVT η_{PVT} during the experiment were determined by the formula:

$$\eta_{PVT} = Q_{PVT} / \left(I A_{PVT}\right), \quad (3)$$

where I is the intensity of solar radiation incident on PVT, W/m^2.

Therefore, as a result of analyzing the data in Fig. 4, we obtained the value of the thermal efficiency of PVT during the experiment. Fig. 9 shows a graph of changes in the thermal efficiency of PVT during the experiment.

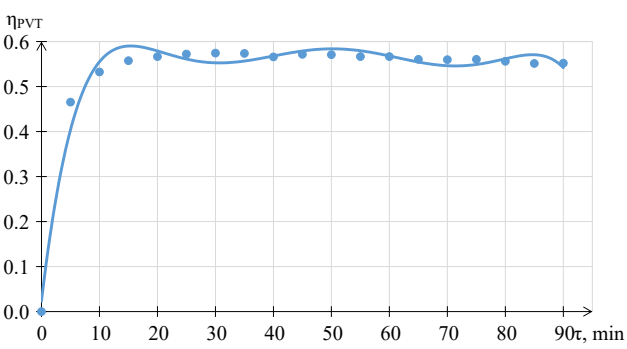

Fig. 9. Thermal efficiency coefficient of a photovoltaic thermal hybrid solar collector η_{PVT}

The thermal efficiency of PVT η_{PVT} as a function of time τ, min, after statistical processing and elimination of insignificant coefficients of the terms is approximately determined by the formula:

$$\eta_{PVT} = 0.0003\tau^3 - 0.0078\tau^2 + 0.1091\tau + 0.0232. \quad (4)$$

The next step in processing and presenting the results is to present the instantaneous specific thermal power and the thermal efficiency coefficient of the system as a whole to understand how efficiently PVT works in conjunction with the thermal accumulator.

The instantaneous values of the specific thermal power of PVT CPS $Q_{PVT\,CPS}$ during the experiment were determined by the formula:

$$Q_{PVT\,CMS} = c_w m_{TA} \Delta t_{TAav.} / A_{PVT}, \text{kJ/m}^2, \quad (5)$$

where c_w=4.187 kJ/(kg·°C) is the specific heat capacity of the heat transfer fluid (water); m_{TA} is the mass of the heat transfer fluid in TA, kg; $\Delta t_{TAav.}$ is the change in the average temperature in TA during heat accumulation, °C.

The study of the instantaneous specific power of PVT CPS in combination with a thermal accumulator is shown in Fig. 10.

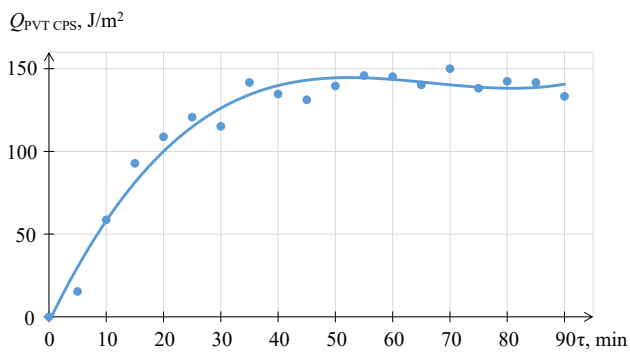

Fig. 10. Instantaneous specific thermal power of the computer model of the system with the proposed design of a photovoltaic thermal hybrid solar collector $Q_{PVT\,CPS}$, J/m^2

The instantaneous specific thermal power of PVT CPS $Q_{PVT\,CPS}$, J/m^2, depending on time τ, min, after statistical processing and exclusion of insignificant coefficients of the terms is approximately determined by the formula:

$$Q_{PVT\,CPS} = 0.0006\tau^3 - 0.113\tau^2 + \\ +7.1864\tau - 3.0704, \text{J/m}^2. \quad (6)$$

The thermal efficiencies of PVT CPS $\eta_{PVT\,CPS}$ during the experiment were determined by the formula:

$$\eta_{PVT\,CMS} = 1000 Q_{PVT\,CMS} / \left(I\Delta\tau\right), \quad (7)$$

where Δτ is the time interval between the previous and current values, s. Changes in the thermal efficiency of PVT CPS during the experiment are shown in Fig. 11.

The thermal efficiency of PVT CPS $\eta_{PVT\,CPS}$ as a function of time τ, min, after statistical processing and elimination of insignificant coefficients of the terms is approximately determined by the formula:

$$\eta_{CPS\,PVT} = -0.0004\tau^2 + 0.0266\tau - 0.0114. \quad (8)$$

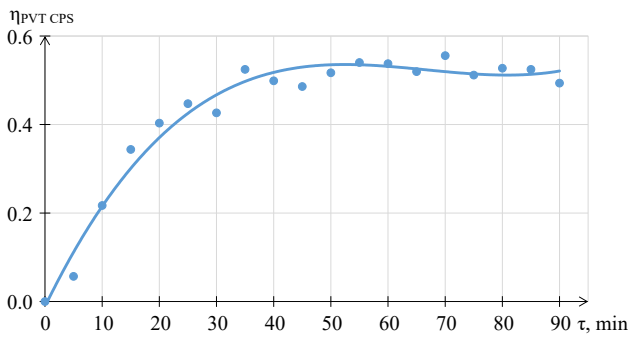

Fig. 11. Thermal efficiency of the computer model of the system with the proposed design of a photovoltaic thermal hybridr solar collector $\eta_{PVT\ CPS}$

The accumulation of specific thermal power of TA in PVT CPS Q_{TA} during the experiment was determined by the formula:

$$Q_{TA} = c_w m_{TA}\left(t_{TA\,av.} - t_{TA\,av.,0}\right)/A_{PVT},\ \text{kJ/m}^2, \quad (9)$$

where c_w=4.187 kJ/(kg·°C) is the specific heat capacity of the heat transfer fluid (water); m_{TA} is the mass of the heat transfer fluid in TA, kg; $t_{TAav.,0}$ is the average temperature of the heat transfer fluid in TA at the initial time, °C, $t_{TAav.,0}=t_w$=15 °C.

Next, we determined the accumulation of thermal power of TA in PVT CPS during the experiment, the graph of which is shown in Fig. 12.

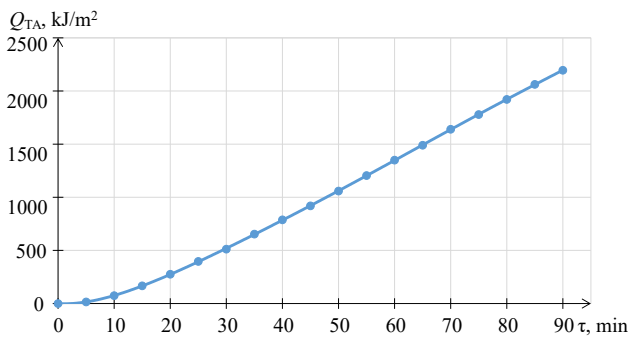

Fig. 12. Accumulation of specific thermal power by a thermal accumulator in the computer model of the system with the proposed design of a photovoltaic thermal hybrid solar collector Q_{TA}, kJ/m^2

The accumulation of specific thermal power of TA in PVT CPS Q_{TA}, kJ/m^2, depending on time τ, min, after statistical processing and exclusion of insignificant coefficients of the terms is approximately determined by the formula:

$$Q_{TA} = 0.0005\tau^4 - 0.0341\tau^3 + 1.335\tau^2 - \\ -2.7984\tau - 0.2228,\ \text{kJ/m}^2. \quad (10)$$

Changes in the efficiency of thermal power accumulation in PVT CPS during the experiment are shown in Fig. 13.

The efficiency of thermal energy accumulation in PVT CPS $\eta_{CPS,TA}$ depending on time τ, min, after statistical processing and exclusion of insignificant coefficients of the terms is approximately determined by the formula:

$$\eta_{CSM,TA} = -0.0003\tau^2 + 0.0183\tau - 0.011. \quad (11)$$

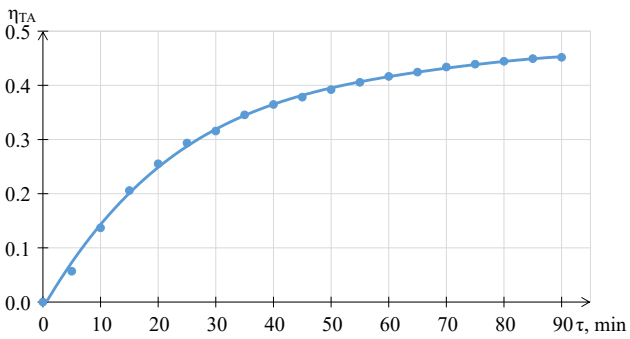

Fig. 13. Thermal power accumulation efficiency of the thermal accumulator in the computer model of the system with the proposed design of a photovoltaic thermal hybrid solar collector η_{TA}

6. Discussion of the results of studying the proposed design of a photovoltaic thermal hybrid solar collector

In accordance with the proposed design of PVT, we developed its computer model with TA in the SolidWorks software package (Fig. 1, *a*). In contrast to [7], which presents thermal and photovoltaic collector designs, the proposed PVT consists of a photovoltaic panel and a thermal solar collector. This allows simultaneous production of thermal and electric energy in one installation, which provides more efficient use of solar energy. In addition, unlike [9], where a flat heat absorber is used, our PVT design uses a concentrator in its thermal part (Fig. 1, *b*). As a result of this solution, the incident solar radiation on the thermal solar collector is focused in the concentrators, which are side-by-side parabolic aluminum plates. They concentrate the sunlight reflected from their walls onto copper tubes placed along their axes, extending along the flow of the heat transfer fluid. This increases the power of solar radiation and the efficiency of its use.

To obtain the thermal characteristics of the proposed PVT design, a computer simulation was performed.

Fig. 2 shows a thermographic visualization of the hybrid solar collector undergoing the thermal simulation process at the end of the experiment on the 5,400th second, i.e. the time sufficient to achieve a quasi-steady-state thermal mode of the system. This simulation shows that the temperature is high in the central part of the collector, where the heat transfer fluid does not sufficiently take heat from the PV cells. This arrangement of the temperature peaks indicates inefficient thermal energy collection in these areas, which may result from the non-optimal integration of the photovoltaic and thermal components.

The temperature gradients indicate a change in temperature from the highest in the central zone to lower in the periphery. Scientifically, this is useful for determining the system's heat losses and the efficiency of heat transfer from the solar collector to the heat transfer fluid. Locations with temperatures approaching 57 °C may indicate high thermal energy that can be transferred to TA. All of these parameters can be measured and optimized through such simulations, allowing for adjustments to the design and materials to achieve the best performance of the hybrid solar collector.

In particular, Fig. 2 shows that the temperature is high in the central part of the collector, where the heat transfer fluid does not sufficiently take heat from the photovoltaic cells. This arrangement of the temperature peaks indicates inefficient thermal energy collection in these areas, which

may result from the non-optimal integration of the photovoltaic and thermal components (Fig. 3). However, in Fig. 4 we can see that no overheating is observed under the part with concentrators.

Analyzing Fig. 3, it can be noted that the temperature field under the photovoltaic panels shows a temperature change of approximately 35 °C to 52 °C. This indicates good thermal insulation in the lower part of the field and effective absorption of solar radiation, given that the ambient temperature is 15 °C. However, the elevated temperature negatively affects the operation of the photovoltaic panels, which should be taken into account in further design improvements.

The obtained temperature gradients (Fig. 2, 3) indicate a change in temperature from the highest in the central zone to lower in the periphery. Scientifically, this is useful for determining the heat losses of the system and the efficiency of heat transfer from the solar collector to the heat transfer fluid. The presence of places where the temperature is close to 57 °C indicates high thermal energy that can be transferred to TA. All of these parameters can be measured and optimized using such simulations, allowing for adjustments in the design and materials to achieve the best performance of the hybrid solar collector.

Fig. 4 shows that along the entire length of the thermo-photovoltaic part of PVT, the temperature in the lower part is about 35 °C, which indicates a significant thermal stress in this part, while the temperature along the thermal part with the concentrator is close to 15 °C.

Fig. 5 shows that at a constant ambient temperature $t_{en.}$ equal to 15 °C, the temperature of the heat transfer fluid in the pipeline at the PVT outlet t_{ex} increased rapidly to 33 °C in the first 20 minutes of the experiment, and then increased uniformly and reached a final value of 43 °C. The temperature of the heat transfer fluid at the PVT inlet t_{en} increased less intensively than t_{ex} in the first 20 minutes, increasing to 25 °C, and then, due to a uniform increase, reached 35 °C at the end of the experiment.

In addition, as a result of modeling thermal processes in the system with PVT, the temperature values of the heat transfer fluid in the pipeline at the inlet and outlet were obtained (Fig. 5). Based on this, it was found that the temperature of the heat transfer fluid at the PVT inlet t_{en} increased less intensively than t_{ex} in the first 20 minutes, increasing to 25 °C. Then, due to a uniform increase, it reached 35 °C at the end of the experiment. We also obtained the temperature values of the heat transfer fluid along the height of TA during the experiment (Fig. 6). According to Fig. 6, the average temperatures in the middle layer t_{TA_2} and in the upper layer t_{TA_3} of the heat transfer fluid volume in TA almost do not differ throughout the experiment. They begin to increase in 5 minutes after the start of measurements and reached 27 °C at the end of the study. The temperature in the lower layer of the heat transfer fluid volume in TA t_{TA_1} increases in 10 minutes after the start of the study and reaches 22.5 °C at the end of the experiment. The values of the average temperature of the heat transfer fluid volume in TA $t_{TA_{av.}}$ tend to the values of t_{TA_2} and t_{TA_3}, because the temperatures in the upper part of TA are higher and almost the same as in the lower part, and reach a maximum value of –25.5 °C at the end of the experiment.

We also analyzed the temperature increase in the heat transfer fluid in the pipeline at the inlet Δt_{en}, °C, at the outlet Δt_{ex}, °C, of the photovoltaic thermal hybrid solar collector with the thermal accumulator Δt_{TAav} (Fig. 7). In particular, the temperature of the heat transfer fluid at the PVT inlet Δt_{en} is less than Δt_{ex} in 20 minutes from the start of measurements, rapidly increases to 10 °C, and reaches 20 °C over the rest of the time due to a uniform increase. In TA, the increase in the average temperature of the heat transfer fluid in it occurs uniformly from 5 min to 90 min, so $\Delta t_{TA_{cp.}}$ increases by 10.5 °C at the end of the experiment.

The next step was to calculate and analyze changes in:

– instantaneous thermal power of PVT (Fig. 8), which after process stabilization averaged 500 W/m^2;

– thermal efficiency coefficient of the photovoltaic thermal hybrid solar collector, which was 0.55 (Fig. 9);

– instantaneous specific thermal power of the computer model of the system with the proposed design of a photovoltaic thermal hybrid collector, equal to 140 J/m^2 at the end of the experiment (Fig. 10);

– thermal efficiency of PVT CPS, which acquires constant values after 50 min from the beginning of the experiment and is equal to 0.5 (Fig. 11);

– efficiency of thermal energy accumulation in TA (Fig. 12). computer model of the system with the proposed design of a photovoltaic thermal hybrid-solar collector (Fig. 1).

In Fig. 8, it is noticeable that after 15 min from the start of the experiment, the instantaneous specific thermal power of PVT Q_{PVT} is stabilized and amounts to 500 W/m^2, which symbolizes the stable operation of the system, as well as its sufficient thermal efficiency.

As can be seen from Fig. 9, the thermal efficiency of PVT η_{PVT} increases rapidly up to the 10th minute and reaches constant values after 20 minutes from the start of the experiment and is equal to 0.55. This indicates a good thermal efficiency of this solar collector. However, this indicates the need to improve its design features to increase this value.

Analyzing the graph of changes in the specific thermal power of PVT CPS in Fig. 10, $Q_{CPS\ PVT}$ is stabilized three times slower than Q_{PVT} and at the end of the experiment is equal to 140 J/m^2.

The thermal efficiency of PVT CPS $\eta_{PVT\ CPS}$ becomes constant after 50 minutes from the beginning of the experiment and is equal to 0.5.

In Fig. 12, the accumulation of specific thermal power in TA in PVT CPS occurs 5 min after the start of the experiment, when the average temperature of the heat transfer fluid in TA $t_{TAav.}$ begins to increase due to changes in t_{TA2} and t_{TA3} (Fig. 2). After 20 min, when the thermal processes in the system are stabilized, the thermal energy in TA is accumulated evenly and reaches 2,200 kJ/m^2 during the experiment.

Thus, the efficiency of thermal energy accumulation of TA in PVT CPS η_{TA} is stabilized only at the end of the experiment and is equal to 0.45.

The proposed PVT design, which contains a photovoltaic and a thermal part, can more efficiently extract energy from solar radiation, but the research data should be further confirmed by experiments on real installations.

It should also be noted that this study of the system with PVT has certain limitations that must be taken into account when interpreting and applying the results. The application of the proposed solutions is limited by the specific PVT design and the assumptions made, and the reproducibility of the results may be limited by measurement errors and unaccounted-for factors of influence in real operating conditions. The robustness of the solutions obtained to changes in influencing factors and the input data ranges, within which the results are adequate, may also require additional verification.

Despite the value of the results obtained, the study has certain shortcomings, such as the lack of experimental

verification, failure to take into account the impact of material degradation, and the lack of technical and economic analysis. Eliminating these shortcomings will increase the reliability and practical value of the results.

The development of this research may include conducting experimental studies on a physical model or a real PVT installation, expanding the range of influence factors studied, optimizing the PVT design, and investigating the possibility of integration with other renewable energy technologies. Each of these areas has its own prospects and potential difficulties, such as the need to develop an experimental stand, significant computing resources, and the complexity of coordinating the operation of various subsystems.

Thus, despite the limitations and shortcomings, this study lays the foundation for further development and improvement of PVT technology. Taking into account the identified limitations, eliminating the shortcomings and implementing the proposed areas of development will increase the reliability, practical value and efficiency of the results obtained, contributing to the wider introduction of PVT into power systems and the transition to sustainable energy.

7. Conclusions

1. A computer model of the proposed PVT design was developed, which takes into account the design features of the photovoltaic thermal solar solar collector, the parameters of the heat transfer fluid and the thermal accumulator. The model makes it possible to study the processes of energy conversion, storage, and transmission in a system with PVT, as well as assess the impact of various factors on its efficiency. The difference between the developed model and existing analogs is a comprehensive consideration of the interaction of the thermal and photovoltaic parts in one installation. The developed model is an effective tool for further optimizing the PVT design and studying its operation under various operating conditions.

2. The thermal characteristics of the proposed PVT design were studied using the developed computer model. Patterns of temperature changes in the heat transfer fluid in PVT and thermal accumulator over time of irradiation were determined. It is shown that the instantaneous thermal power of the solar collector was 540 W/m^2, and the average efficiency was 0.6 (or 60 %). The change in the instantaneous specific thermal power of the system with PVT, which reached 450 W/m^2, as well as its efficiency in thermal energy accumulation in the thermal accumulator, which amounted to 0.5 (or 50 %), was investigated. The results are explained by the efficiency of the proposed PVT design, which ensures the simultaneous production of heat and electricity, as well as optimal balancing of the thermal and photovoltaic parts.

Conflict of interest

The authors declare that they have no conflict of interest in relation to this study, whether financial, personal, authorship, or otherwise, that could affect the study and its results presented in this paper.

Financing

The study was conducted without financial support.

Data availability

The manuscript has no associated data.

Use of artificial intelligence

The authors confirm that they did not use artificial intelligence technologies when creating the presented work.

References

1. Fedoryshyn, R., Matiko, F., Pistun, Y. (2008). Prospects for improving the accuracy of natural gas accounting and for reducing gas unbalances. AAAM International Vienna. Available at: https://go.gale.com/ps/i.do?p=AONE&u=anon~f6e906bb&id=GALE|A225316212&v=2.1&it=r&sid=googleScholar&asid=05e2cb38
2. Paris Agreement (2015). United Nations. Available at: https://treaties.un.org/doc/Treaties/2016/02/20160215%2006-03%20PM/Ch_XXVII-7-d.pdf
3. Stec, M., Grzebyk, M. (2022). Statistical Analysis of the Level of Development of Renewable Energy Sources in the Countries of the European Union. Energies, 15 (21), 8278. https://doi.org/10.3390/en15218278
4. Vanegas Cantarero, M. M. (2020). Of renewable energy, energy democracy, and sustainable development: A roadmap to accelerate the energy transition in developing countries. Energy Research & Social Science, 70, 101716. https://doi.org/10.1016/j.erss.2020.101716
5. Wisniewski, G., Golebiowski, M., Gryciuk, K. et al. (2008) kolektory słoneczne. Energia słoneczna w mieszkalnictwie, hotelarstwie i drobnym przemyśle. Warszawa: Medium. Available at: https://www.ibuk.pl/fiszka/2466/kolektory-sloneczne-energia-sloneczna-w-mieszkalnictwie-hotelarstwie-i-drobnym-przemysle.html
6. Pluta, Z. (2007). Słoneczne instalacje energetyczne. Warszawa: Oficyna Wydaw. Politechniki Warszawskiej. Available at: https://bg.pcz.pl/apiszb/book/38505/Sloneczne-instalacje-energetyczne-Zbyslaw-Pluta
7. Duffie, J. A., Beckman, W. A. (2013). Solar Engineering of Thermal Processes. John Wiley & Sons, Inc. https://doi.org/10.1002/9781118671603
8. Obstawski, P., Bakoń, T., Czekalski, D. (2020). Comparison of Solar Collector Testing Methods – Theory and Practice. Processes, 8 (11), 1340. https://doi.org/10.3390/pr8111340
9. Algarni, S. (2023). Evaluation and optimization of the performance and efficiency of a hybrid flat plate solar collector integrated with phase change material and heat sink. Case Studies in Thermal Engineering, 45, 102892. https://doi.org/10.1016/j.csite.2023.102892

10. Kuravi, S., Trahan, J., Goswami, D. Y., Rahman, M. M., Stefanakos, E. K. (2013). Thermal energy storage technologies and systems for concentrating solar power plants. Progress in Energy and Combustion Science, 39 (4), 285–319. https://doi.org/10.1016/j.pecs.2013.02.001
11. Hassan, A., Nikbakht, A. M., Fawzia, S., Yarlagada, P. K. D. V., Karim, A. (2023). Transient analysis and techno-economic assessment of thermal energy storage integrated with solar air heater for energy management in drying. Solar Energy, 264, 112043. https://doi.org/10.1016/j.solener.2023.112043
12. Gautam, A., Saini, R. P. (2020). A review on sensible heat based packed bed solar thermal energy storage system for low temperature applications. Solar Energy, 207, 937–956. https://doi.org/10.1016/j.solener.2020.07.027
13. Pona, O. M., Voznyak, O. T. (2014). Efficiency of helio roofing in the gravity system of heat supply. Construction, materials science, mechanical engineering, 76, 231–235. Available at: http://nbuv.gov.ua/UJRN/smmeect_2014_76_43
14. Shapoval, S., Zhelykh, V., Venhryn, I., Kozak, K., Krygul, R. (2019). Theoretical and experimental analysis of solar enclosure as part of energy-efficient house. Eastern-European Journal of Enterprise Technologies, 2 (8 (98)), 38–45. https://doi.org/10.15587/1729-4061.2019.160882
15. Marushchak, U., Sydor, N., Braichenko, S., Hohol, M. (2023). Effect of Dry-Wet Cycles on Properties of High Strength Fiber-Reinforced Concrete. Proceedings of CEE 2023, 265–272. https://doi.org/10.1007/978-3-031-44955-0_27
16. Sydor, N., Marushchak, U., Braichenko, S., Rusyn, B. (2020). Development of Component Composition of Engineered Cementitious Composites. Proceedings of EcoComfort 2020, 459–465. https://doi.org/10.1007/978-3-030-57340-9_56
17. Shapoval, S., Spodyniuk, N., Zhelykh, V., Shepitchak, V., Shapoval, P. (2021). Application of rooftop solar panels with coolant natural circulation. Pollack Periodica, 16 (1), 132–137. https://doi.org/10.1556/606.2020.00218
18. Kareem, M. W., Habib, K., Pasha, A. A., Irshad, K., Afolabi, L. O., Saha, B. B. (2022). Experimental study of multi-pass solar air thermal collector system assisted with sensible energy-storing matrix. Energy, 245, 123153. https://doi.org/10.1016/j.energy.2022.123153
19. Francesconi, M., Antonelli, M., Desideri, U. (2023). Assessment of the optical efficiency in solar collectors: Experimental method for a concentrating solar power. Thermal Science and Engineering Progress, 40, 101740. https://doi.org/10.1016/j.tsep.2023.101740
20. Govindasamy, D., Kumar, A. (2023). Experimental analysis of solar panel efficiency improvement with composite phase change materials. Renewable Energy, 212, 175–184. https://doi.org/10.1016/j.renene.2023.05.028
21. Aitola, K., Gava Sonai, G., Markkanen, M., Jaqueline Kaschuk, J., Hou, X., Miettunen, K., Lund, P. D. (2022). Encapsulation of commercial and emerging solar cells with focus on perovskite solar cells. Solar Energy, 237, 264–283. https://doi.org/10.1016/j.solener.2022.03.060
22. Guminilovych, R., Shapoval, P., Yatchyshyn, I., Shapoval, S. (2015). Modeling of Chemical Surface Deposition (CSD) of CdS and CdSe Semiconductor Thin Films. Chemistry & Chemical Technology, 9 (3), 287–292. https://doi.org/10.23939/chcht09.03.287
23. Hamdan, M. A., Abdelhafez, E., Ahmad, R., Aboushi, A. R. (2014). Solar Thermal Hybrid Heating System. Conference: Energy Sustainability and Water Resource Management for Food Security in the Arab Middle East. Beirut. Available at: https://www.researchgate.net/publication/273633383_Solar_Thermal_Hybrid_Heating_System
24. Abdelhafez, E. A., Hamdan, M. A., Al Aboushi, A. R. (2016). Simulation of Solar Thermal Hybrid Heating System Using Neural Artificial Network. Conference: 8th International Ege Energy Symposium and Exhibition (IEESE-8). Afyonkarahisar. Available at: https://www.researchgate.net/publication/308348965_Simulation_of_Solar_Thermal_Hybrid_Heating_System_Using_Neural_Artificial_Network
25. Vankovych, D., Bota, O., Malovanyy, M., Odusha, M., Tymchuk, I., Sachnyk, I. et al. (2021). Assessment of the Prospects of Application of Sewage Sludge from Lviv Wastewater Treatment Plants for the Purpose of Conducting the Biological Reclamation. Journal of Ecological Engineering, 22 (2), 134–143. https://doi.org/10.12911/22998993/130892
26. Klein, S. A., Beckman, W. A., Duffie, J. A. (1976). A design procedure for solar heating systems. Solar Energy, 18 (2), 113–127. https://doi.org/10.1016/0038-092x(76)90044-x