UDC 621.365.5:664
DOI: 10.15587/2312-8372.2017.112507

Pogozhikh M.,
Pak A.,
Pak A.,
Chekanov M.

INFLUENCE OF THE AIR FLOW VELOCITY RELATIVELY THERMOSTAT OBTURATOR ON THE EFFECTIVENESS OF INDUCED HEAT AND MASS TRANSFER

Досліджено особливості протікання ефекту індукованого тепломасообміну за різної швидкості потоку повітря, що рухається відносно обтюратора термостата. Розраховано енергетичний баланс ефекту індукованого тепломасообміну за різної швидкості потоку повітря для виявлення особливостей даного ефекту. Визначені межі регулювання інтенсивності ефекту тепломасообміну швидкістю потоку повітря, що рухається відносно обтюратора термостата.

Ключові слова: *індукований тепломасообмін, обтюратор термостата, швидкість потоку повітря.*

1. Introduction

Environmental problems, the increase in the cost of energy resources determine the significant interest of food enterprises in the use of energy-efficient technologies and equipment for processing food raw materials and manufacturing products made from it [1]. At present, the problem of processing agricultural raw materials and products with the aim of reducing their losses [2], increasing the shelf life [3], improving the quality of food products [4] and their competitiveness is topical [5].

A promising direction in solving these problems is the use of induced processes in production [6]. For such processes of heat transfer, mass, momentum, etc. does not occur autonomously, but only under the condition of overcoming some energy activation barrier [7]. Apparatus created using such processes, as a rule, are characterized by high energy efficiency and environmental friendliness [8].

2. The object of research and its technological audit

One of such induced processes is the process, which is based on the effect of induced heat and mass transfer (IHMT) [9]. This effect is the *object of research.* So far, this effect has been theoretically developed only within the framework of the process of drying food raw materials (drying with mixed heat supply) [10].

The IHMT effect is observed in a thermostat. The temperature of the thermostat $T_{termostat}$ is kept constant, and its heat capacity is considered to be infinite. In the allocated volume inside the thermostat $V_{termostat}$ there is a liquid volume V_{liquid} and gas volume V_{gas}, which is a mixture of air and water vapor. Also $V_{termostat}$ may contain an insoluble or partially soluble in liquid dry substance with a volume of V_{solid}, which has either no specific structure. The pressure in the thermostat $p_{termostat}$ is constant and equals atmospheric p_{∞}.

The thermostat is combined with the environment through the obturator, which is an opening in a thermostat with a capillary-porous body (CPB) placed in it, the volume of which is much smaller than the internal volume of the $V_{obt} \ll V_{termostat}$. The surface area of the obturator is much smaller than the surface area of the thermostat $S_{obt} \ll S_{termostat}$. The obturator limits the free access of ambient gas to the internal volume of the thermostat.

A thermostat with two or three phases and an obturator form a system that has two equilibrium states:

- unstable equilibrium – the temperature of all parts of the dynamic system asymptotically tends to the temperature of the thermostat, while there is practically no mass exchange with the environment;
- stable equilibrium, the temperature of all parts of the dynamic system is equal to the temperature of the thermostat, while the liquid phase inside the thermostat is absent.

The IHMT effect consists in the transition of the system from an unstable equilibrium to a stable one, which is accompanied by the dissipation of heat due to the transition of the liquid phase in the thermostat to the gas state.

For today, in spite of a large number of experimental data obtained for the IHMT effect, the physical mechanism of a number of features of its course remains insufficiently described, and it is impossible to explain them based on the theoretical foundations given in the studies on its investigation [10]. Decompositions of the theoretical foundations of the IHMT effect determine the prospectivity of the study, which consists in identifying the potential for its use in various technologies and in the efficient management of energy costs to produce products with specified properties.

To identify the IHMT features, a technological audit is conducted, which is aimed at determining the effect of the air flow velocity, moving relative to the thermostat obturator, on the nature of this effect. At the same time, experimentally obtained temperature kinetics of a model colloidal capillary-porous body (CCPB) in the internal volume of the thermostat during the IHMT is investigated. And also the heat balance of this effect is calculated for different values of the air velocity moving relative to the thermostat obturator.

3. The aim and objectives of research

The aim of research is determination of the limits of the energy efficiency regulation of IHMT effect by detecting the influence on its nature of such control parameter as the flow velocity of air moving relative to the thermostat obturator.

To achieve this aim it is necessary:

1. Determine the position of the characteristic local minima and maxima on the CCPB temperature kinetics during IHMT for different values of the control parameter.
2. Calculate the energy balance of the IHMT effect at different airflow velocities, moving relative to the thermostat obturator, to reveal the features of this effect.
3. Analyze the differences between the kinetics of the heat flux, which is consumed in the internal environment of the thermostat, at different airflow velocities moving relative to the obturators.

4. Research of existing solutions of the problem

The system «environment – internal environment of the thermostat», under the condition of the IHMT effect, is a dynamic system with respect to the mass and thermal energy [11]. In such systems, possible processes of self-organization, which cause efficient dispersion (dissipation) of thermal energy due to phase transitions of the first kind [12]. For this system, two groups of parameters are distinguished: the order parameters are the internal properties of the system that determine the IHMT scale and its kinetics; control parameters are factors that allow to adjust the power of the effect by external actions.

The paper considers the possibility of controlling the IHMT effect intensity by its control parameters. At the same time, existing solutions to this problem can be found, based on the necessary and sufficient conditions for the organization of the IHMT effect. Among them, it is necessary to distinguish the condition that the components of the dynamic system must fulfill for IHMT realization: the presence of fluctuations at the interface between the internal and external environment. The technical realization of this condition is provided by the method of creating a flow of air moving relative to the outer surface of the obturator and its parameters. Fluctuations in the concentration of water molecules of the internal gaseous medium are created by mechanical disturbances that can be realized by an external [13] or internal [14] gaseous medium of the thermostat.

The first of the methods for creating fluctuations can be organized by blowing the surface of the obturator external with respect to the inside of the thermostat. The external surface of the obturator is blown by a stream of air at a rate at which the air flow regime corresponds to the turbulent flow regime. As a result of the formation of turbulent disturbances near the surface, it is washed by a stream of air, pulsations of air velocity [15] perpendicular to its direction occur in the flow. Such pulsations have a stochastic character [16] and create fluctuations in the parameters of the gaseous medium of the thermostat in the volume of the obturator during IHMT.

Another way to create fluctuations in the concentration of water molecules of the internal gas medium in the volume of the obturator is the excitation of mechanical oscillations in a given medium. Excitation of oscillations is possible by generating sound vibrations [17] of the appropriate frequency in a continuous gaseous medium inside the thermostat by appropriate devices (infrasound [18], ultrasonic [19], sound [20] generators, etc.).

However, it should be noted that the presence of air flow relative to the outer surface of the obturator is necessary both for the first method of organizing the concentration fluctuations and for the other. The air flow, firstly, can create a fluctuation in the obturator, if necessary. Secondly, it reduces the diffuse layer, which is formed by liquid molecules in the gaseous state through mass exchange between the surrounding medium and the internal medium of the thermostat and which reduces the gradient of the concentration of water molecules in the volume of the obturator. Reducing the concentration gradient of water molecules in the obturator helps to reduce the magnitude of the induced mass flow. Thus, from the point of view of the IHMT efficiency, the organization of air movement relative to the outer surface of the obturator is necessary both from the first way of creating the fluctuations, and from the other. Proceeding from the work mentioned above, studies are carried out to determine the effect the IHMT effect on the character of one of the air flow characteristics moving relative to the thermostat obturator – its velocity.

5. Methods of research

In the study, a thermostat is used, the internal extracted volume of which has the form of a parallelepiped (Fig. 1) with dimensions of 95×15×22 mm (heat and mass exchange module (HME module), which limits the internal volume of the thermostat). The obturators are made on the 95×15 mm plane of the HME module. The width of the obturator plane, which borders on the environment is 1 mm, the length is 95 mm.

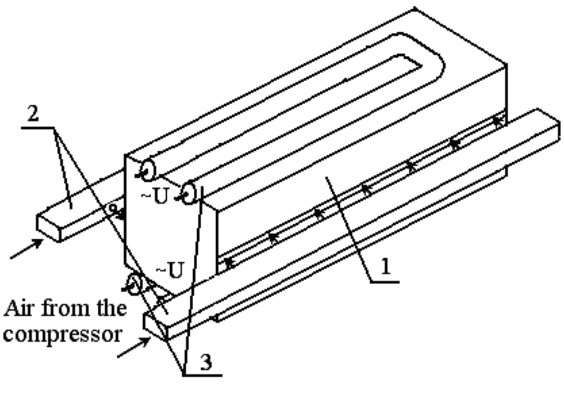

Fig. 1. Diagram of the experimental device for detecting the effect of the air movement velocity relative to the obturator on the nature of the induced heat and mass transfer effect: 1 – a module that limits the internal volume of the thermostat; 2 – channels for air flow; 3 – heating elements

Along the gaps with obturators, the tubes are fixed, in which the longitudinal slots are made in size not less than the clearance by the obturator. They are tightly attached to the outer surface of the HME module in such way that the slots coincide with the gaps. The tubes, driven by the compressor, are moving along the tubes. Thermostating is carried out in a conductive manner from two heating elements of 22×95 mm in plane. It should be noted that the voltage on the heating elements and the current through them are kept constant, so it is possible to assume that the heat flux from the heating surfaces is kept constant. This is one of the principal differences in the IHMT provision in this paper from previous studies [21].

The thermostat is tightly filled with the model CCPB. In this study, pieces in the form of parallelepipeds measuring 95×5×22 mm are cut out, which are located along the gaps in the internal walls of the thermostat, parallel to the heating surfaces. The functions of the obturator carry out the CCPB part tightly adjacent to the gap.

Thermocouples are placed in the layers of the raw material, as shown in Fig. 2.

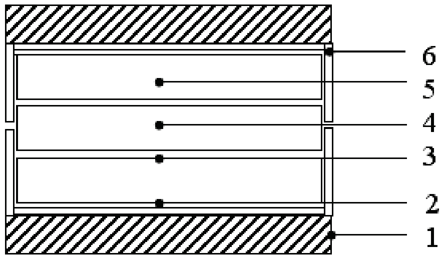

Fig. 2. Diagram of thermocouple placement in the inner part of the thermostat from Fig. 1: 1, 2, 3, 4, 5, 6 – thermocouples

The hydrodynamic pressure is determined using a Pitot tube placed in one of the channels along which air moves. The hydrodynamic pressure varies discretely with the compressor setting and has a value of Pa: 100; 50; 10. The air movement velocity is determined by the formula:

$$\nu = \sqrt{\frac{2p_{dyn}}{\rho}}, \qquad (1)$$

where p_{dyn} – hydrodynamic air pressure, Pa; ρ – air density, kg/m^3.

In this case, the air movement velocity (hydrodynamic pressure) in accordance is equal, m/s (Pa): 13 (100); 9 (50); 4 (10). An analysis of the nature of the IHMT effect and its efficiency is based on the nature of the CCPB temperature kinetics and the location of local minima and maxima on these kinetics.

6. Research results

The CCPB temperature kinetics during the IHMT effect, obtained for the velocity (hydrodynamic pressure) of the air flow moving relative to the obturators, is 13 m/s (100 Pa), is shown in Fig. 3.

The nature of the model CCPB temperature kinetics obtained from thermocouples located at different points inside the thermostat is the same. The figures in Fig. 3 denote the numbers of thermocouples from Fig. 2. The CCPB temperature grows and reaches a certain value (from 0.1 durations to 0.15 for different coordinates), from which the temperature decreases. Starting from 0.38...0.4 durations, a change in the slope of the temperature kinetics takes place – the temperature decrease becomes more significant. Beginning with 0.7 duration of the process, a sharp decrease in temperature occurs, which ends at a minimum (0.83 (3), 0.85 (4, 5), 0.87 (2)). Then the temperature increases and reaches the temperature of the thermostat.

Based on the form of the CCPB temperature kinetics during the IHMT, they can be divided into 5 characteristic regions (Fig. 4). In the first section there is an increase in the CCPB temperature before reaching a local maximum. This section corresponds to the heating of the material to a certain temperature and the achievement of a bifurcation point by the system. In the second and third sections, the temperature decreases monotonically. These areas are distinguished by the inclination angle to the axis, on which the duration of the process is postponed. In the second and third sections, the intensity of dissipation of the heat flux that comes from the walls of the thermostat on the phase first-order transition increases.

In the fourth section, the temperature of the raw material decreases sharply and reaches a local minimum. The minimum temperature corresponds to the completion of the IHMT effect due to the outflow of system water participating in the effect in the thermostat. CCPB appears in the region of gyroscopic moisture content, which is proved by its kinetics of moisture content (Fig. 4).

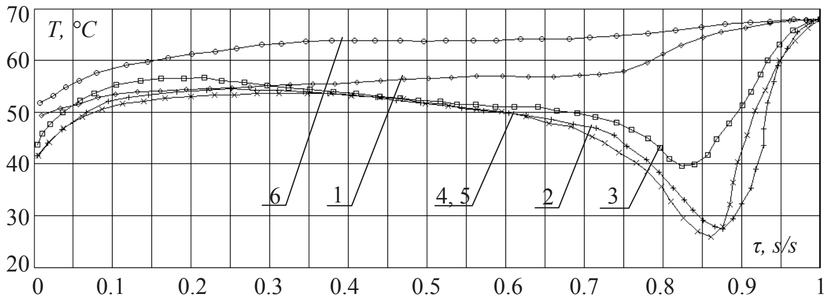

Fig. 3. Kinetics of the temperature of a colloidal capillary-porous body at a velocity (hydrodynamic pressure) of the air flow moving relative to the thermostat obturator – 13 m/s (100 Pa): 1, 2, 3, 4, 5, 6 – thermocouples from Fig. 2

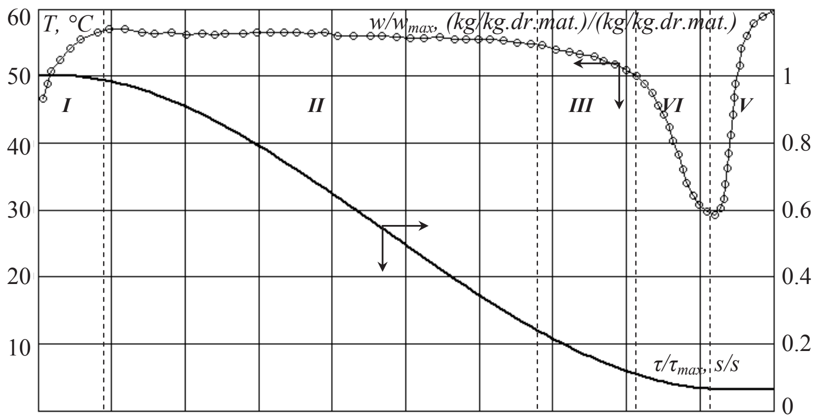

Fig. 4. Periodization of the kinetics of temperature and moisture content of a model colloidal capillary-porous body during the induced heat and mass transfer in a thermostat

The increase in the inclination angle during the transition from the second section to the third, from the third to the fourth is due to the development of the power of heat dissipation by the dissipative structures during IHMT. The effect is completed at the maximum power dissipation of heat by dissipative structures due to the expiration of a part of the water that can evaporate.

In the fifth section, the temperature increases and reaches the temperature of the thermostat. This section corresponds to the heating of the internal medium of the thermostat, namely solid, liquid and gas phases, to the temperature of the thermostat.

Kinetics of the CCPB temperature for two other values of motion velocity (hydrodynamic pressure) of the air flow moving relative to the obturators, that is, 9 m/s (50 Pa) and 4 m/s (10 Pa), have the same character. The differences are in the duration of the second, third and fourth sections corresponding to the «start», «flow» and «end» of the IHMT effect. For increasing the blowing velocity, the length of the sections varies as follows (Table 1).

Table 1

The relative length of the sections of the temperature kinetics during the induced heat and mass transfer

Velocity (hydrodynamic pressure), m/s (Pa)	Length of section $\Delta\tau/\tau_{max}$, s/s		
	II	III	IV
4 (10)	0.58	0.12	0.08…0.125
9 (50)	0.5…0.55	0.2	0.12
13 (100)	0.23…0.3	0.3	0.17

The relative length of the second section decreases for increasing the blowing velocity: with an increase in velocity by 2.25 times – by 5…14 %, with an increase of 3.35 times – by 48…60 %.

The relative duration of the third section increases with a change in the blowing velocity: with an increase in velocity of 2.25 times – by 67 %, with an increase of 3.35 times – by 150 %.

The relative length of the fourth section increases insignificantly, 2.25 times, within the margin of error, and by an increase of 3.35 times by 62 %.

Evidently, changes in the relative length of the second, third, and fourth sections are associated with a change in the intensity of the heat flux dissipation that flows to the internal medium of the thermostat. This flow is spent on evaporation of the CCPB system water and depends on the velocity (hydrodynamic pressure) of the air flow moving relative to the obturators.

To identify the reasons for this influence, let's write down the energy balance of the IHMT effect in a thermostat under the given conditions. One of the initial data for calculating the balance is the kinetics of the temperature of the wall of thermostat (thermocouple 1 of Fig. 2), which re fixed during the experiment. The kinetics of the wall temperature of the thermostat is proportional to the heat flux to the internal medium of the thermostat with a certain coefficient.

The kinetics of the heat flux of the «environment – thermostat – internal medium of the thermostat» system will look like:

$$q_{termostat} = q_{loss} + q_{in}, \tag{2}$$

where $q_{termostat}$ – heat flux that is provided by the heating surfaces of the thermostat, J/s; q_{loss} – constant heat flux into the environment, due to thermal convection from the outer surface of the thermostat walls, which contact the environment, J/s; q_{in} – heat flux that flows to the internal environment of the thermostat, J/s.

To account for heat losses q_{loss} from the outer surface of the walls of the thermostat to the environment, an experiment is performed in which a thermostat is heated, filled with a material with a known constant heat capacity, to the equilibrium temperature. At the same time, the conditions for conducting the experiment are created in the same way as in the case of IHMT in a thermostat with a wet CCPB inside.

Based on the results of the experiment, the kinetics of the wall temperature during the heating process, as well as the kinetics of the heat flux, is obtained, which enters the internal medium of the thermostat filled with a material with a known constant heat capacity. The kinetics of the heat flux to the internal medium of the thermostat was calculated based on the kinetics of the temperature of the material with a known heat capacity that filled it. The investigations are carried out at an ambient temperature of 20…23 °C.

The obtained dependences are characterized by a constant scale coefficient $coef_{scale}$. This coefficient is an effective coefficient of heat exchange between the inner surface of the walls of the thermostat and its internal allocated volume. It depends on the area of the outer surface of the thermostat walls that come into contact with the environment, and on the wall temperature and ambient temperature. In the case under consideration, for the equilibrium temperature of the thermostat 68…71 °C and the ambient temperature of 20…23 °C, the scaling factor is –116 W/°C. Thus, by multiplying the kinetics of the temperature of the thermostat walls by a given scale factor, it is possible to determine heat flux, which flows to the internal environment of the thermostat from the surface of its walls:

$$q_{in} = coef_{scale} T_{termostat\,side}(\tau)\Big|_{t_\infty = const}, \tag{3}$$

where $T_{termostat\,side}(\tau)$ – the function describing the temperature kinetics of the heating surface.

The heat flow to the internal environment of the thermostat is spent on the phase transition of water (q_{evapor}) and CCPB (q_{solid}) and water (q_{water}) heating to the temperature of the thermostat:

$$q_{in} = q_{evapor} + q_{solid} + q_{water}, \tag{4}$$

while the part of the heat flow for the phase transition of the system water (dissipated flow) is calculated by the formula:

$$q_{evapor} = -\frac{dm_{water}(\tau)}{d\tau}\cdot r; \tag{5}$$

part of the heat flow for the CCPB heating to the current temperature:

$$q_{solid} = C_{solid} m_{solid} \frac{dT(\tau)}{d\tau}; \tag{6}$$

part of the heat flow for heating of the current water mass ($m_{water}(\tau)$) inside the thermostat to the current temperature:

$$q_{water} = C_{water} m_{water}(\tau)\frac{dT(\tau)}{d\tau}, \qquad (7)$$

where C_{solid}, C_{water} – heat capacity of dry matter and water, J/(kg·K); m_{solid} – mass of solids, kg; $m_{water}(\tau)$ – current mass of water in thermostat, kg; r – specific heat of vaporization, J/kg.

Let's construct the kinetics of the heat flow from the walls of the thermostat to its internal medium and the heat flux kinetics is consumed in the internal medium as the sum of its components, that is, as the sum of (5), (6) and (7). The initial data in this case will be the kinetics of the CCPB temperature, the kinetics of the temperature of the walls of the thermostat, the kinetics of the CCPB moisture content, the heat capacity and the mass of dry substances, the heat capacity of the water. The current mass of water is determined by the kinetics of the CCPB moisture content, which fills the entire extracted internal volume of the thermostat. The kinetics of the heat flux from the walls of the thermostat is determined by formula (3) as the product of the function describing the kinetics of the temperature of its walls by the scale factor.

The following notations are used in Fig. 5. 1 denotes the kinetics of the heat flux from the walls of the thermostat to its internal medium, calculated from formula (3). 2, 3, and 4 denote the kinetics of the heat flux, which is consumed by heating the dry matter and water at the current temperature, calculated from the sections in accordance with the performed periodization of the temperature kinetics of the model CCPB (Fig. 4) using formulas (6) and (7). 5 denotes the kinetics of the heat flow, which is expended on the evaporation of water in the internal environment of the thermostat. The calculation of this kinetics is carried out in accordance with the kinetics of the CCPB moisture content according to the formula (5). The kinetics of the heat flow is consumed in the internal volume of the thermostat, calculated according to the formula (4), indicated by the 6.

The resulted kinetics of heat flow for clarity are normalized to the total amount of heat that has flowed to the internal environment of the thermostat. It should be noted that the area under the kinetics of heat flow from the walls of the thermostat is proportional to the amount of heat entering its internal environment.

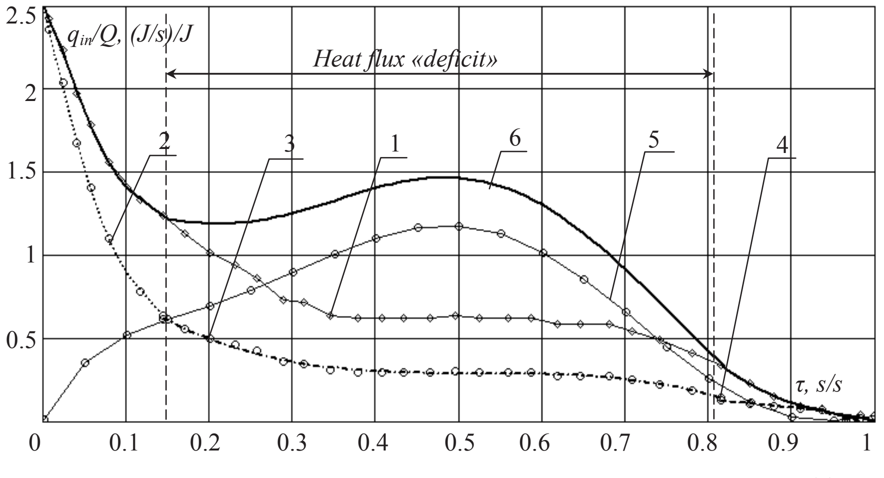

Fig. 5. The kinetics of the heat flow from the walls of the thermostat to its internal medium (1) and the kinetics of the heat flow that are consumed by the internal medium of the thermostat (6), obtained by calculations in terms of components (2)–(5), normalized to the total amount of heat Q

From the obtained results (Fig. 5), it can be seen that the heat coming from the walls of the thermostat to its internal environment is less important than the heat that is consumed in it. During the IHMT in the internal environment of the thermostat, the heat is expended on heating the components to the equilibrium temperature of the walls and on the phase transition of the liquid inside the thermostat to the gaseous state. Calculations show that during IHMT there is a shortage of heat, which is 25...30 % of the required amount.

According to the first law of thermodynamics, the temperature of any system under the condition of a constant heat flux from the outside can change either by transferring heat to a body with a lower temperature, or by performing work:

$$dU = \delta Q \pm \delta A, \qquad (8)$$

where dU – the internal energy, J; δQ – the amount of heat transferred to the system, J; δA – the work performed by the system («–») or over the system («+»), J.

It is established that the heat flux from the walls of the thermostat is insufficient to reproduce the obtained heat flux kinetics that is consumed in the internal environment of the thermostat. Therefore, it should be considered that the observed fact indicates the performance of work on the system, which is induced by the flow of air moving relative to the thermostat obturator. In this case, the external operation of the air flow, which moves relative to the outer surface of the thermostat obturator, provides the activation energy E_A of the IHMT effect in magnitude. The studies on the IHMT effect, in particular mixed heat supply drying [9], show that in the absence of a flow of air moving relative to the obturators or at an air flow velocity (hydrodynamic pressure) less than a certain minimum value, the «start», «flow» and «end» of the IHMT effect are impossible.

Thus, the activation energy E_A for the IHMT organization is provided by the appropriate velocity (hydrodynamic pressure) of the air flow moving relative to the thermostat obturator.

Since the heat flow kinetics is consumed in the internal medium of the thermostat, at different velocities (hydrodynamic pressure) of air (Fig. 6), normalized to the total amount of expended heat Q, it is clear that the nature of the dependences is the same. The area under the curves is proportional to the amount of energy that is consumed in the thermostat for heat and mass transfer. The area under the curves is calculated without taking into account the heating of the internal medium of the thermostat from the initial temperature.

The differences in these dependences are in the values of their amplitude and width of local maxima. Since in each of the three experiments the same thermostat is used, with the same CCPB, with the same initial amount of system water in the thermostat, the area under the curves should be the same. The heat coming from the walls of the thermostat is the same, so the intensity of the process will be determined by the energy of the air flow moving relative to the obturators. At the same time, the IHMT intensity at different airflow velocities, moving relative to the obturators, ranges from 4 to 13 m/s in the range of 15…20 %. It is established that it is possible to control the IHMT intensity by the air flow velocity moving relative to the obturators.

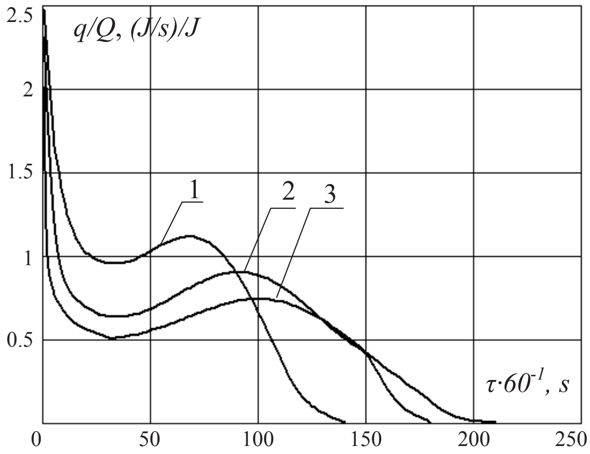

Fig. 6. The kinetics of the heat flow that is consumed in the internal environment of the thermostat at different velocity (hydrodynamic pressure) of the air flow moving relative to the obturators m/s (Pa): 1 – 13 (100); 2 – 9 (50); 3 – 4 (10)

Thus, by calculating the heat flux that flows to the internal medium of the thermostat and the heat flux that dissipates in it, it is proved that the IHMT effect is impossible without external activation work, which is performed by the flow of air moving relative to the obturators. At the same time, the work of the air flow moving relative to the obturators is the controlling parameter by means of which the «start» of the IHMT is organized. This external work provides the activation energy of the IHMT effect in magnitude. At values of this control parameter smaller than E_A, the «start» of the IHMT effect is absent.

7. SWOT analysis of research results

Strengths. Among the strengths of this research, it should be noted the establishment of the fact that the activation energy E_A of the IHMT effect is achieved by the kinetic energy of the air flow moving relative to the thermostat obturators. At the same time, the work of the air flow moving relative to the obturators is the controlling parameter by means of which the IHMT «start» is organized. It is established that, firstly, it is possible to control the «start» of the IHMT effect in accordance with the goal of technological processing of raw materials using this effect. And secondly, it is reasonable to change the IHMT flow rate and its efficiency by varying the airflow velocity with respect to the obturators.

Weaknesses. The weak side of research is that the determination of the activation energy E_A of the IHMT effect in this case is possible only indirectly, that is, according to the calculated energy balance of this effect. This fact is observed because of the complexity of the theoretical calculation of the pulsation values of the air velocities arising at the surface of the obturator due to the formation of turbulent disturbances in the air flow and creating fluctuations in the volume of the obturator. When determining the activation energy of the IHMT effect by an indirect method, the probability of errors that involve errors in the engineering calculations of apparatuses using the IHMT, and, as a result, an increase in energy costs for the heat and mass exchange process.

Opportunities. An additional opportunity to achieve the aim of research in the work is the computer simulation of turbulent disturbances in the air flow near the surface of the obturator with the subsequent calculation of the average amplitude of air velocity pulsations and determination of the IHMT activation energy. Such information will allow to accurately take into account when choosing the method for creating fluctuations in the thermostat obturator, the energy costs for the IHMT effect and the features of its technical implementation, which will contribute to improving the energy efficiency of the IHMT devices and reducing the cost of their production.

Threats. The difficulty in implementation of obtained results is that when developing the IHMT devices and choosing the rational values of such control parameter as the air flow velocity relative to the obturators, it is necessary to take into account not only the IHMT energy efficiency, but also the costs associated with providing the appropriate airflow velocity.

It is meant that an increase in the IHMT effect intensity by 15…20 % entails additional capital expenditures for technical complications or an increase in the capacity of devices to provide the appropriate airflow velocity. However, the expediency of such operation can be justified by the technical potential of the enterprise on which this research is being implemented.

8. Conclusions

1. Investigations of the kinetics of CCPB temperature inside the thermostat during the IHMT effect are established that they can be divided into 5 characteristic regions corresponding to different stages of the flow of this effect. It has been established that the duration of the sections corresponding to the «start», «flow» and «end» of the IHMT effect depends on the velocity of the air flow moving relative to the obturator and can vary by 5 to 60 % with an increase in velocity from 4 to 9 m/s and with an increase from 4 to 13 m/s – by 48…150 %.

2. Calculations of the heat balance during IHMT found that with this effect, the available heat deficit in the thermostat, which is 25…30 % of the required amount. It is noted that this fact indicates the work on the system, which is induced by the flow of air moving relative to the thermostat obturator, while the external work of the air flow, which moves relative to the obturator, provides the activation energy E_A of the IHMT effect in magnitude. It is proved that the work of the air flow moving relative to the obturator is the controlling parameter by means of which the IHMT «start» is organized.

3. Investigations of the kinetics of the heat flux inside the thermostat at an air flow velocity of 4 to 13 m/s, which moves relative to the obturators is established that

the IHMT intensity can be regulated by this control parameter within 15...20 %.

References

1. Natsionalnyi plan dii z vidnovliuvanoi enerhetyky na period do 2020 roku [Electronic resource] / State Agency on Energy Efficiency and Energy Saving of Ukraine. – Available at: \www/URL: http://saee.gov.ua/sites/default/files/documents/Presentation_NAPRES_Norw_OCT_3_ukr.pdf. – 10.01.2017.
2. Shuvaev, A. V. The transformational model of agriculture and the problems of social, ecological and economic [Text] / A. V. Shuvaev // Economy and entrepreneurship. – 2013. – No. 9. – P. 405–409.
3. Naumov, O. B. Institutional regulation's strategic priorities of the food industry innovative development [Text] / O. B. Naumov, S. S. Stoianova-Koval // The Scientific Papers of the Legislation Institute of the Verkhovna Rada of Ukraine. – 2017. – No. 1. – P. 131–137.
4. Krisanov, D. F. The system guarantees safety and quality of food products in Ukraine: retrospective reform and the level of formation of the European dimension [Text] / D. F. Krisanov // Ekonomic & food security of Ukraine. – 2013. – No. 1. – P. 64–72.
5. Chernelevskyy, L. Features and prospects of international quality standards in the processing industry [Text] / L. Chernelevskyy, N. Kudrenko // Scientific works of National university of food technologies. – 2014. – Vol. 20, No. 4. – P. 30–37.
6. Ng, K. C. Improving Overall Equipment Effectiveness (OEE) through the six sigma methodology in a semiconductor firm: A case study [Text] / K. C. Ng, K. E. Chong, G. G. G. Goh // 2014 IEEE International Conference on Industrial Engineering and Engineering Management. – IEEE, 2014. – P. 833–837. doi:10.1109/ieem.2014.7058755
7. Behdin, S. Effectiveness of Laser Application for Periodontal Surgical Therapy: Systematic Review and Meta-Analysis [Text] / S. Behdin, A. Monje, G.-H. Lin, B. Edwards, A. Othman, H.-L. Wang // Journal of Periodontology. – 2015. – Vol. 86, No. 12. – P. 1352–1363. doi:10.1902/jop.2015.150212
8. Danilevicius, P. Laser 3D micro/nanofabrication of polymers for tissue engineering applications [Text] / P. Danilevicius, S. Rekstyte, E. Balciunas, A. Kraniauskas, R. Sirmenis, D. Baltriukiene, V. Bukelskiene, R. Gadonas, V. Sirvydis, A. Piskarskas, M. Malinauskas // Optics & Laser Technology. – 2013. – Vol. 45. – P. 518–524. doi:10.1016/j.optlastec.2012.05.038
9. Pogozhikh, M. The development of an artificial energotechnological process with the induced heat and mass transfer [Text] / M. Pogozhikh, A. Pak // Eastern-European Journal of Enterprise Technologies. – 2017. – Vol. 1, No. 8 (85). – P. 50–57. doi:10.15587/1729-4061.2017.91748
10. Pogozhikh, M. I. Hidrotermichna obrobka krup iz vykorystanniam pryntsypiv sushinnia zmishanym teplopidvodom [Text]: Monograph / M. I. Pogozhikh, A. O. Pak, M. V. Zherebkin, A. V. Pak. – Kharkiv: KhDUKhT, 2014. – 170 p.
11. Strogatz, S. Non-linear Dynamics and Chaos: With applications to Physics, Biology, Chemistry, and Engineering [Text] / S. Strogatz. – Westview Press, 2001. – 515 p.
12. Ouannas, A. Generalized synchronization of different dimensional chaotic dynamical systems in discrete time [Text] / A. Ouannas, Z. Odibat // Nonlinear Dynamics. – 2015. – Vol. 81, No. 1-2. – P. 765–771. doi:10.1007/s11071-015-2026-0
13. Chen, Y. Analysis of the influences of gas temperature fluctuation on the soot formation and oxidation [Text] / Y. Chen, J. Zhang // Fuel. – 2013. – Vol. 111. – P. 492–495. doi:10.1016/j.fuel.2013.03.077
14. Gu, X. Experimental study of pressure fluctuation in a gas-solid cyclone separator [Text] / X. Gu, J. Song, Y. Wei // Powder Technology. – 2016. – Vol. 299. – P. 217–225. doi:10.1016/j.powtec.2016.05.028
15. Noskov, A. S. Visualization of air flow in vortex tube using different turbulence models [Text] / A. S. Noskov, V. N. Alekhin, A. V. Khait, N. M. Anoshin // Russian Journal of Construction Science and Technology. – 2015. – No. 1. – P. 43–48.
16. Safaei, M. Numerical modeling of turbulence mixed convection heat transfer in air filled enclosures by finite volume method [Text] / M. Safaei, M. Goodarzi, M. Mohammadi // The International Journal of Multiphysics. – 2011. – Vol. 5, No. 4. – P. 307–324. doi:10.1260/1750-9548.5.4.307
17. Kentish, S. Applications of Power Ultrasound in Food Processing [Text] / S. Kentish, H. Feng // Annual Review of Food Science and Technology. – 2014. – Vol. 5, No. 1. – P. 263–284. doi:10.1146/annurev-food-030212-182537
18. Sani, A. M. Ultrasound applications for the preservation, extraction, processing and quality control of food [Text] / A. M. Sani, M. Sardarodiyan // BioTechnology: An Indian Journal. – 2016. – Vol. 12, No. 4. – P. 162–174.
19. Mohammadi, V. Ultrasonic techniques for the milk production industry [Text] / V. Mohammadi, M. Ghasemi-Varnamkhasti, R. Ebrahimi, M. Abbasvali // Measurement. – 2014. – Vol. 58. – P. 93–102. doi:10.1016/j.measurement.2014.08.022
20. Nikonova, A. S. Investigation of the method of reception of liquid fof smoking on the basis acoustically generated aerosol [Text] / A. S. Nikonova, A. A. Ivaney // Scientific journal NRU ITMO. Series «Processes and Food Production Equipment». – 2014. – No. 4. – P. 161–168.
21. Pogozhikh, M. Technical implementation of the equipment using the process of induced heat and mass transfer [Text] / M. Pogozhikh, A. Pak, A. Pak, M. Zherebkin // ScienceRise. – 2017. – Vol. 6. – P. 29–33. – doi:10.15587/2313-8416.2017.1036

ВЛИЯНИЕ СКОРОСТИ ПОТОКА ВОЗДУХА ОТНОСИТЕЛЬНО ОБТЮРАТОРА ТЕРМОСТАТА НА ЭФФЕКТИВНОСТЬ ИНДУЦИРОВАННОГО ТЕПЛОМАСООБМЕНА

Исследованы особенности протекания эффекта индуцированного тепломассообмена при различной скорости потока воздуха, движущегося относительно обтюратора термостата. Рассчитан энергетический баланс эффекта индуцированного тепломассообмена при различной скорости потока воздуха для выявления особенностей данного эффекта. Определены пределы регулирования интенсивности эффекта тепломассообмена скоростью потока воздуха, движущегося относительно обтюратора термостата.

Ключевые слова: индуцированный тепломассообмен, обтюратор термостата, скорость потока воздуха.

Pogozhikh Nicolay, *Doctor of Technical Sciences, Professor, Head of the Department of Physical and Mathematical and Engineering-Technical Disciplines, Kharkiv State University of Food Technology and Trade, Ukraine, e-mail: m.pogozhikh@hduht.edu.ua, ORCID: http://orcid.org/0000-0002-0835-4896*

Pak Andrey, *PhD, Associate Professor, Department of Physical and Mathematical and Engineering-Technical Disciplines, Kharkiv State University of Food Technology and Trade, Ukraine, e-mail: a.pak@hduht.edu.ua, ORCID: http://orcid.org/0000-0003-3140-3657*

Pak Alina, *PhD, Associate Professor, Department of Merchandising and Examining the Quality of Goods, Kharkiv Institute of Trade and Economics of Kyiv National University of Trade and Economics, Ukraine, e-mail: pak.alina1984@gmail.com, ORCID: http://orcid.org/0000-0002-0311-9731*

Chekanov Nicolay, *PhD, Associate Professor, Department of Physical and Mathematical and Engineering-Technical Disciplines, Kharkiv State University of Food Technology and Trade, Ukraine, e-mail: chekanov_n@ukr.net, ORCID: http://orcid.org/0000-0003-1131-3195*