UDC 621.311
DOI: 10.15587/2706-5448.2024.301779

Stepan Mysak,
Stepan Shapoval

ANALYSIS OF THE ENERGY EFFICIENCY OF A SYSTEM WITH A HYBRID SOLAR COLLECTOR AND THERMAL ENERGY STORAGE

The object of research is heat transfer in a hybrid thermal photovoltaic solar collector.

International agreements and strategies aimed at combating climate change and reducing greenhouse gas emissions strongly call for the active implementation of renewable energy sources on a global scale. A special emphasis is placed on the development of solar energy, which has significant growth potential due to the constant improvement of technologies and cost reduction of production. With this in mind, the authors focused on the development and analysis of a computer model of an innovative hybrid system that effectively combines a solar collector for the simultaneous production of both thermal and electrical energy.

The research included a detailed study of the temperature changes of the heat carrier in the hybrid photovoltaic solar collector and thermal accumulator during the period of solar irradiation. Thanks to careful monitoring, the main patterns of gradual temperature increase in both key components of the hybrid system were established. In addition, an assessment of the dynamics of changes in the instantaneous thermal power of the solar collector under the influence of various factors, such as the intensity of solar radiation, the angle of inclination of the collector, wind speed, etc., was carried out.

The results of computer modeling showed the average indicator of the efficiency of the entire hybrid system, as well as its variations during a certain time of operation. In addition, the change in the instantaneous specific heat capacity and the overall efficiency of heat energy generation by the hybrid photovoltaic solar collector were analyzed. Special attention was paid to the study of the dynamics of changes in the thermal efficiency of the entire system, as well as its ability to efficiently store thermal energy in a specialized battery.

The comprehensive analysis made it possible to obtain the key thermophysical parameters of the developed hybrid system with a photovoltaic solar collector. This data is extremely important, as it will allow engineers and scientists to accurately calculate the potential performance and efficiency of such a system when it is put into practical use in the future. In general, the results of the study emphasize the promising development of hybrid solar collectors as one of the leading technologies in the field of renewable energy in the context of global challenges of climate change.

Keywords: *energy efficiency, solar collector, thermal battery, energy supply system, alternative energy sources.*

Received date: 22.02.2024
Accepted date: 08.04.2024
Published date: 15.04.2024

© The Author(s) 2024
This is an open access article
under the Creative Commons CC BY license

How to cite
Mysak, S., Shapoval, S. (2024). Analysis of the energy efficiency of a system with a hybrid solar collector and thermal energy storage. Technology Audit and Production Reserves, 2 (1 (76)), 51–56. doi: https://doi.org/10.15587/2706-5448.2024.301779

1. Introduction

Rapid growth in prices for traditional fuels, numerous conflicts due to the struggle for control over energy resources, as well as increasing environmental problems due to their consumption – all these factors emphasize the urgent need for an active transition to renewable energy sources. One of the priority directions is the improvement of existing and the development of the latest technologies that allow the efficient use of alternative sources for energy production. Today, a wide selection of equipment is available for converting solar radiation into thermal and electrical energy, but hybrid systems capable of simultaneously generating these two types of energy deserve special attention.

This study is devoted to the development and analytical study of a hybrid solar thermal photovoltaic collector. The main tasks include the assessment of existing methods of optimizing solar collectors for efficient heat and electricity generation, the creation of a computer model of the proposed system, as well as an empirical study of its thermal characteristics. *The object of research* is the hybrid system, and the subject of research is the thermal processes occurring in it. The basis of this research is to obtain key indicators of the thermal efficiency of the system and to develop a calculation method for various operating conditions. The practical value of the research is determined by the possibility of real implementation of such systems for energy supply of various objects.

ISSN 2664-9969

The development of technologies of hybrid thermal photovoltaic solar collectors is of great importance in the modern world. They allow simultaneous use of two types of energy – thermal and electric, increasing the overall efficiency of using solar radiation. This approach contributes to reducing dependence on traditional fossil fuels, reducing greenhouse gas emissions, and combating climate change.

In addition, the improvement of hybrid solar collectors stimulates the creation of new innovative technological solutions in the field of renewable energy, which positively affects the development of this sector and the creation of new jobs. Such collectors can be effectively used both at large industrial facilities and in individual residential buildings, reducing heating and electricity costs. They can be integrated into autonomous energy supply systems, as well as be used to generate heat in industrial processes or heat water in private homes. Thus, the introduction of technologies of hybrid thermal photovoltaic collectors contributes to overcoming the energy deficit and stimulates sustainable environmentally friendly development.

In the conditions of the growing environmental crisis, the scientific community, in accordance with the Paris Agreement [1], emphasizes the need to intensify the use of renewable energy sources [2] and gradually move away from traditional fossil fuels [3]. In this regard, the development and improvement of solar power supply systems is becoming increasingly important [4–6].

Flat plate, vacuum tube and hybrid systems are among the most common types of solar collectors. Concentrating systems capable of increasing the heat flow density attract special attention [7, 8]. The efficiency of flat solar collectors can be increased by increasing the heat exchange area, using highly thermally conductive materials, creating turbulence and changing the direction of fluid movement [9, 10], as well as applying a selective coating [11]. Studies have shown that solar collectors equipped with a phase-changing material and a radiator provide longer supply of hot water in the evening and have a lower output temperature in the morning [12]. Currently, the thermal and exergetic efficiency of various systems has been studied, which demonstrates the perspective of their application [13–16].

Researchers are actively studying the possibilities of using solar energy for heating heat supply systems. An analysis of the energy characteristics of the combined heat supply system with the use of solar collectors integrated into the protective coatings of buildings was carried out, which opens up new directions for the development of solar energy supply systems [1].

In [17], an experimental analysis of various types of solar collectors was carried out in order to improve their efficiency, and in [18] a new methodology for evaluating the optical efficiency of solar collectors was presented, which is important for modern research.

The energy industry of leading countries is actively implementing hybrid photovoltaic-thermal solar systems, which allow obtaining both thermal and electrical energy. In such systems, energy is traditionally generated by two separate installations: thermal solar collectors and photovoltaic panels. Photovoltaic technology converts solar radiation into electrical energy, while thermal solar technology converts it into heat. The hybrid system works exclusively due to solar radiation [19].

To minimize the shortcomings and increase the efficiency of the photoelectric thermal collector, the authors suggest using computer modeling systems. The researched installation consists of a flat photovoltaic and thermal solar collector.

The aim of research is to develop a thermal efficiency modeling system with a hybrid thermal photovoltaic solar collector. This will make it possible to determine thermal dependencies and optimal operation of the heat supply system.

2. Materials and Methods

For research, a computer model of a hybrid solar system was developed, which combines thermal and photovoltaic modules to convert solar energy into electrical and thermal energy. The coolant circulation system is made of copper pipes, which ensures optimal thermal conductivity. The thermal section includes parabolic aluminum mirror concentrators for maximum thermal energy collection. Heat accumulation takes place in a steel tank without an internal heat exchanger to avoid additional heat flows and losses that may affect the accuracy of experimental data. This allows the thermal part of the system to work in conditions that ensure an accurate display of its thermophysical characteristics, contributing to the collection of reliable data for analysis. This methodological approach significantly increases the quality and accuracy of experimental measurements.

When conducting a multifactorial experiment, modern mathematical methods were used for planning and data analysis, as well as for modeling in the SolidWorks software package. This made it possible to model and visualize in detail the working processes of the proposed system with a hybrid thermal photovoltaic solar collector (HTPSC), which contributed to a deeper understanding and optimization of its operation. The results of computer simulations correspond to expectations based on theoretical calculations and known empirical observations in the field of solar energy.

Therefore, the conclusions and recommendations formulated on the basis of this study have a high degree of reliability. They make a valuable contribution to the development of solar energy and can be implemented in practice to provide energy to residential, commercial and industrial facilities, opening up new opportunities for increasing their energy efficiency.

3. Results and Discussions

In order to achieve the set goals, it was decided to develop an improved design of a hybrid solar collector that combines photovoltaic and thermal functions (Fig. 1).

The absence of a heat exchanger in the heat accumulator will have a positive effect on the operation of the system during research, since the presence of this element can distort the results of the experiment, affecting the heat exchange process. Without a heat exchanger in the heat accumulator, the system will work more efficiently, which will allow to focus on studying and evaluating the process of heat accumulation directly. Therefore, for a more accurate study of the system with a solar collector and a thermal accumulator, it is recommended to conduct experiments without the use of a heat exchanger. This type of collector makes efficient use of sunlight while generating electricity and capturing heat energy that would otherwise be lost. Such systems are often used in sustainable construction projects and can significantly reduce heating and electricity costs.

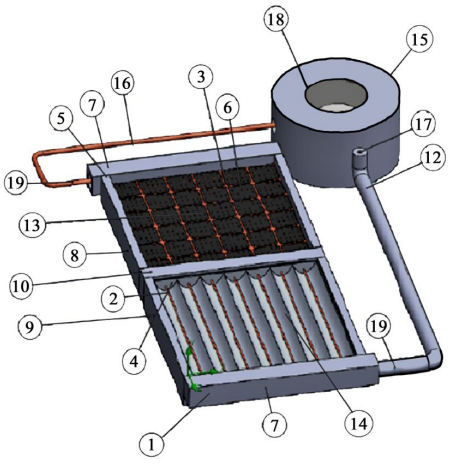

Fig. 1. Elements of the computer model of the proposed design of the thermal photovoltaic hybrid solar collector: 1 – HTPSC; 2 – concentrator tube; 3 – gaps (distance between solar cells); 4 – concentrator; 5 – comb; 6 – solar cell; 7 – comb heater; 8 – insulation of the thermophotoelectric part; 9 – insulation of the reflector (concentrator); 10 – insulation of the adapter; 12 – insulation of the output pipe; 13 – thermophotoelectric part of HTPSC; 14 – thermal part with HTPSC concentrators; 15 – tank; 16 – inlet pipe; 17 – outlet pipe; 18, 19 – places for mounting temperature sensors

At the same time, a significant decrease in temperature in the direction of the opposite edge of the collector may indicate insufficient thermal insulation or suboptimal circulation of the coolant, which leads to heat losses. The temperature difference can also indicate losses due to convection currents of internal air, a thermal bridge in the collector structure, or due to an unglazed area. Therefore, to increase the energy efficiency of the collector, it is necessary to optimize the heat exchange processes to ensure a uniform thermal field and reduce heat losses through the side and top surfaces. In addition, it is necessary to improve the design of the system, in particular, consider options with increased flow turbulence, which can improve heat transfer. It is also important to improve the thermal insulation characteristics of the collector, using materials with low thermal conductivity to minimize heat loss.

Fig. 2 shows the temperature distribution under the thermal and photovoltaic parts of the hybrid solar collector at the end of the experiment, obtained using computer simulation.

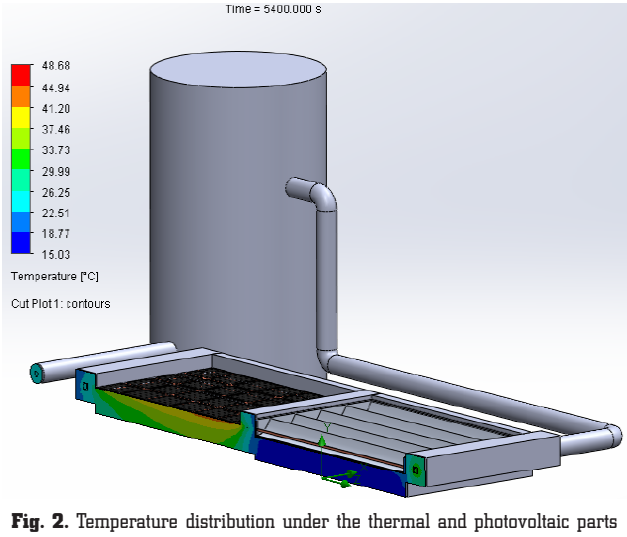

Fig. 2. Temperature distribution under the thermal and photovoltaic parts of the hybrid solar collector at the end of the experiment

The thermographic scale shows the temperature range from a minimum of 15 °C to a maximum of 48.6 °C. The heat-absorbing part, which contains the photovoltaic elements and the heat exchange system, shows the highest temperature values, which indicates the effective absorption of solar energy, but at the same time, the overheating of the photovoltaic elements and the insufficient removal of this energy to the following sections of the hybrid solar collector.

Analysis of the temperature distribution shows that the upper part of the collector has a temperature 68.68 % higher than the lower limit of the indicated range. This may indicate a thermal gradient that favors convection of the coolant, but may also indicate potential heat losses in the system. Thermal engineering analysis based on temperature distribution suggests significant heat losses, especially in areas with lower temperatures. The efficiency of heat exchange in the area of high temperatures indicates the inefficient use of solar energy by the solar collector. High temperatures in the upper part of the collector indicate efficient heat exchange in this zone, but a significant temperature gradient may indicate insufficient efficiency of heat exchange in the lower parts of the system. Regarding thermal insulation and construction, the temperature difference between the upper and lower segments can also indicate possible problems with the insulation and design of the collector, which needs further optimization to reduce heat loss.

To solve these problems, it is necessary to develop a more efficient circulation scheme of the coolant to ensure a more even distribution of temperatures and minimize heat losses. In addition, the thermal insulation properties of the collector should be improved, especially in its upper part. In the future, design changes need to be made, in particular, to revise the design of the collector to minimize thermal bridges and optimize thermal resistance.

Overall, the simulation results show that the hybrid solar collector has promising thermal performance, but needs further optimization to improve thermal efficiency and reduce losses. This can be achieved by improving the design and using more efficient materials.

Fig. 3 shows the temperature distribution in the cross section of the photovoltaic solar collector. This distribution is important for the analysis of heat exchange processes in the zone where the generation of thermal and electrical energy occurs simultaneously.

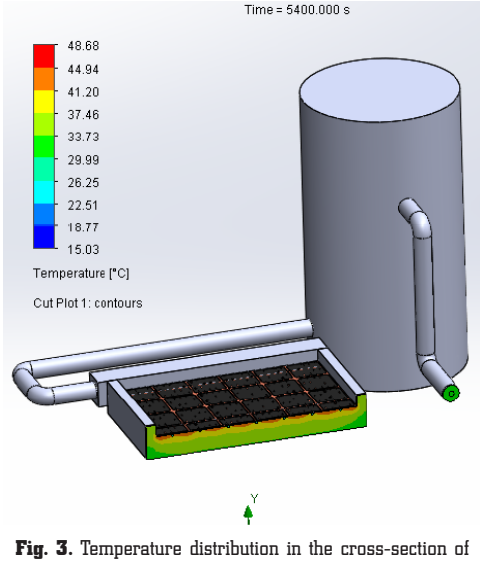

Fig. 3. Temperature distribution in the cross-section of a photovoltaic solar collector

ISSN 2664-9969

Analyzing Fig. 3, it can be seen that the maximum recorded temperature is 48.68 °C, which is 33.68 °C or 223 % higher than the minimum recorded temperature of 15 °C. This distribution indicates significant thermal non-uniformity within the system.

Assuming that the collector material has a constant coefficient of thermal conductivity, the unevenness of the temperature fields may indicate uneven thermal resistance or distribution of heat losses. This simulation highlights thermal stratification in the reservoir, where higher temperatures are concentrated in certain zones. This may be a sign of inefficient convection or insufficient mixing of the coolant in the system.

Next, the temperature increases of the heat carrier in HTPSC and TB were determined, Fig. 4.

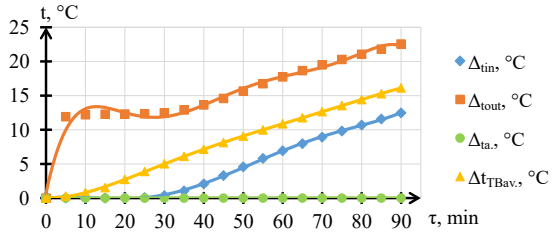

Fig. 4. Temperature increase of the heat carrier in the pipeline at the inlet Δt_{in}, °C, at the exit Δt_{out}, °C, from HTPSC, in TB, Δt_{TBav}, °C, and the ambient temperature $\Delta t_{a.}$, °C

In Fig. 4, it is observed that in the absence of a change in the temperature of the ambient temperature t_a, the temperature increase of the heat carrier in the pipeline at the exit from the HTPSC Δt_{out} increases rapidly during the first 10 minutes. Then, up to 35 minutes, the increase in temperature almost does not change, and during the rest of the time it increases uniformly, reaching at the end of the experiment. The increase in the temperature of the heat carrier at the entrance to the HTPSC Δt_{in} begins to increase after 25 minutes from the beginning of the measurements and, due to a uniform increase, reaches the end of the experiment. In TB, the average temperature of the coolant increases uniformly from 10 min to 90 min.

The analysis of the instantaneous specific power of the combined energy supply system (CESS) from the HTPSC is presented in Fig. 5.

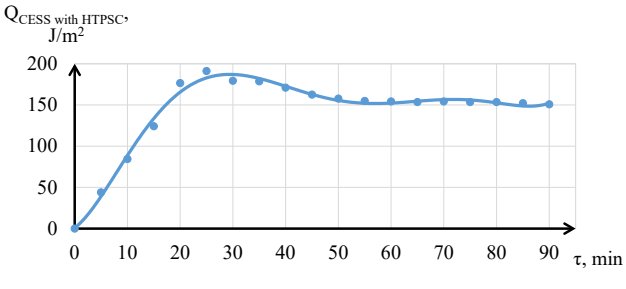

Fig. 5. Instantaneous specific thermal power of CESS with HTPSC

Analyzing the graph of the change in the specific thermal power of CESS with HTPSC (Fig. 5) $Q_{CESS\ with\ HTPSC}$, it increases rapidly until 25 min, where it reaches the maximum value – 191 J/m^2, then slowly decreases until 55 min, and then becomes constant – 150 J/m^2.

Changes in the thermal efficiency of CESS with HTPSC during the experiment are presented in Fig. 6.

Therefore, the thermal efficiency of CESS with HTPSC $\eta_{CASS\ with\ HTPSC}$ increases rapidly up to 25 min, where it reaches its maximum value – 0.71, then slowly decreases up to 55 min, and then becomes constant and is equal to 0.56.

Next, the accumulation of TB thermal energy in CESS with HTPSC was determined during the experiment, the graph of which is shown in Fig. 7.

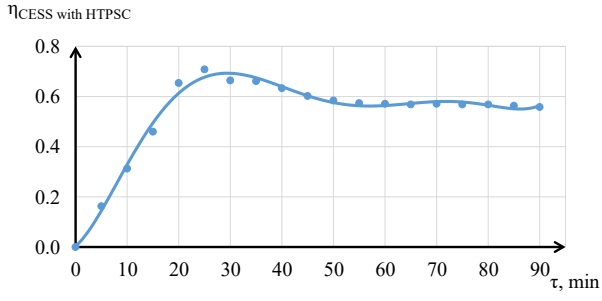

Fig. 6. Thermal efficiency of CESS with HTPSC $\eta_{CESS\ with\ HTPSC}$

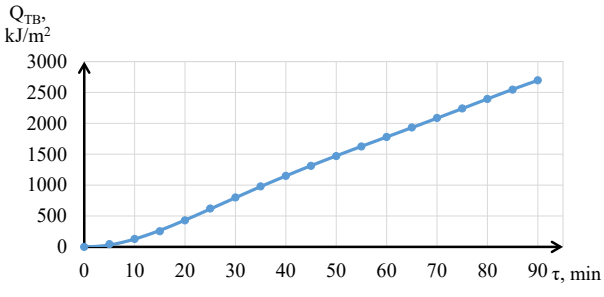

Fig. 7. Accumulation of specific thermal energy of TB in CESS with HTPSC Q_{TB}, kJ/m^2

In Fig. 7, it can be seen that the accumulation of specific thermal energy of TB in CESS with HTPSC begins almost from the beginning of the experiment, when the average temperature of the heat carrier in TB begins to increase due to changes in inlet and outlet temperatures. After 35 minutes, when the thermal processes in the system stabilize, the thermal energy in the TB accumulates uniformly and reaches a maximum during the experiment.

The changes in the thermal energy storage efficiency of TB in CESS with HTPSC during the experiment are shown in Fig. 8.

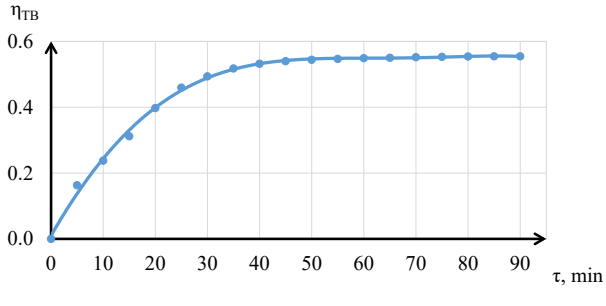

Fig. 8. Efficiency of storage of thermal energy of TB in CESS with HTPSC η_{TB}

Therefore, the efficiency of storage of thermal energy of TB in CESS with HTPSC η_{TB} stabilizes only for 55 min of the experiment and is equal to 0.55.

The research results have important practical significance for the development of solar energy and the improvement of energy efficiency of enterprises and farms. The developed computer model of the hybrid thermal photovoltaic solar collector (HTPSC) allows to optimize the design

and operating parameters of such systems for the most efficient conversion of solar energy into heat and electricity. Also, the obtained data on temperature distribution, instantaneous specific heat capacity, thermal efficiency and efficiency of heat accumulation can be used in the design and implementation of HTPSC in heat supply and power generation systems of residential, commercial and industrial facilities.

Despite the promising results, there are certain limitations for their direct implementation in practice. First, the research was based on computer simulation, therefore, it is necessary to conduct experimental tests of real prototypes of HTPSC to confirm and clarify theoretical data. Secondly, the proposed design of the HTPSC needs further optimization and adaptation to specific climatic conditions and features of energy supply facilities.

The instability of energy supply and damage to energy infrastructure as a result of hostilities on the territory of Ukraine have increased the urgency of developing autonomous and backup energy supply systems based on renewable sources, such as solar energy. On the other hand, economic instability and reduced funding for scientific research in wartime conditions can slow down the pace of implementation of innovative energy-efficient technologies. However, the obtained results open wide prospects for further research in the field of hybrid solar collectors. It is advisable to explore the possibilities of integrating the HTPSC with other renewable energy systems, such as wind generators, heat pumps, biogas plants, etc., to create complex autonomous energy systems. Also, a promising direction is the development of intelligent control systems of HTPSC based on forecasting weather conditions, energy needs of consumers and optimization of work modes.

4. Conclusions

A thermal efficiency modeling system with a hybrid thermal photovoltaic solar collector has been developed, which make it possible to determine the main thermophysical characteristics of the power system with a tank battery from the selected factors.

It has been shown that the temperature of the coolant in both the solar collector and the battery tends to increase, which demonstrates the efficiency of the system in converting solar energy into thermal energy, namely up to 20 °C in 90 minutes. In parallel, the influence of various factors on the instantaneous thermal power of the solar collector, which reached 190 W/m^2, has been analyzed. This makes it possible to evaluate changes in the efficiency of the system over time, as well as to study the dynamics of the instantaneous specific heat capacity and the overall efficiency of the hybrid system. In addition, the dependence of the thermal efficiency on the ability of the system to accumulate thermal energy in the battery has been investigated, which reached a value of about 70 % and opens new perspectives for improving the operation of hybrid solar systems. The thermophysical parameters of the developed system obtained during the research provide important information for further calculation and practical implementation of hybrid thermal photovoltaic solar collectors, contributing to more efficient use of solar energy to meet heat and electricity needs.

Conflict of interest

The authors declare that they have no conflict of interest in relation to this research, whether financial, personal, authorship or otherwise, that could affect the study and its results presented in this paper.

Financing

The study was performed without financial support.

Data availability

The paper has no associated data.

Use of artificial intelligence

The authors confirm that they did not use artificial intelligence technologies when creating this work.

References

1. *Paris Agreement* (2015). United Nations. Available at: https://treaties.un.org/doc/Treaties/2016/02/20160215%2006-03%20PM/Ch_XXVII-7-d.pdf Last accessed: 25.09.2023
2. Stec, M., Grzebyk, M. (2022). Statistical Analysis of the Level of Development of Renewable Energy Sources in the Countries of the European Union. *Energies, 15 (21),* 8278. doi: https://doi.org/10.3390/en15218278
3. Vanegas Cantarero, M. M. (2020). Of renewable energy, energy democracy, and sustainable development: A roadmap to accelerate the energy transition in developing countries. *Energy Research & Social Science, 70,* 101716. doi: https://doi.org/10.1016/j.erss.2020.101716
4. Shapoval, S., Spodyniuk, N., Zhelykh, V., Shepitchak, V., Shapoval, P. (2021). Application of rooftop solar panels with coolant natural circulation. *Pollack Periodica, 16 (1),* 132–137. doi: https://doi.org/10.1556/606.2020.00218
5. Wisniewski, G., Golebiowski, M., Grzciuk, et al. (2008). *Kolektorz Sloneczne. Energia słoneczna w mieszkalnictwie, hotelarstwie i drobnzm pryemysle.* Warszawa: Medium.
6. Pluta, Z. (2007). *Sloneczne instalacje energetzczne.* Warsyava: Oficyna Wydawnicza Politechniki Warszawskiej.
7. Kuravi, S., Trahan, J., Goswami, D. Y., Rahman, M. M., Stefanakos, E. K. (2013). Thermal energy storage technologies and systems for concentrating solar power plants. *Progress in Energy and Combustion Science, 39 (4),* 285–319. doi: https://doi.org/10.1016/j.pecs.2013.02.001
8. Aitola, K., Gava Sonai, G., Markkanen, M., Jaqueline Kaschuk, J., Hou, X., Miettunen, K., Lund, P. D. (2022). Encapsulation of commercial and emerging solar cells with focus on perovskite solar cells. *Solar Energy, 237,* 264–283. doi: https://doi.org/10.1016/j.solener.2022.03.060
9. Obstawski, P., Bakoń, T., Czekalski, D. (2020). Comparison of Solar Collector Testing Methods – Theory and Practice. *Processes, 8 (11),* 1340. doi: https://doi.org/10.3390/pr8111340
10. Algarni, S. (2023). Evaluation and optimization of the performance and efficiency of a hybrid flat plate solar collector integrated with phase change material and heat sink. *Case Studies in Thermal Engineering, 45,* 102892. doi: https://doi.org/10.1016/j.csite.2023.102892
11. Guminilovych, R., Shapoval, P., Yatchyshyn, I., Shapoval, S. (2015). Modeling of Chemical Surface Deposition (CSD) of CdS and CdSe Semiconductor Thin Films. *Chemistry & Chemical Technology, 9 (3),* 287–292. doi: https://doi.org/10.23939/chcht09.03.287
12. Govindasamy, D., Kumar, A. (2023). Experimental analysis of solar panel efficiency improvement with composite phase change materials. *Renewable Energy, 212,* 175–184. doi: https://doi.org/10.1016/j.renene.2023.05.028

13. Hassan, A., Nikbakht, A. M., Fawzia, S., Yarlagada, P. K. D. V., Karim, A. (2023). Transient analysis and techno-economic assessment of thermal energy storage integrated with solar air heater for energy management in drying. *Solar Energy, 264*, 112043. doi: https://doi.org/10.1016/j.solener.2023.112043
14. Gautam, A., Saini, R. P. (2020). A review on sensible heat based packed bed solar thermal energy storage system for low temperature applications. *Solar Energy, 207*, 937–956. doi: https://doi.org/10.1016/j.solener.2020.07.027
15. Pona, O. M., Voznyak, O. T. (2014). Efficiency of helio roofing in the gravity system of heat supply. *Construction, materials science, mechanical engineering, 76, 231*–235.
16. Shapoval, S., Zhelykh, V., Venhryn, I., Kozak, K., Krygul, R. (2019). Theoretical and experimental analysis of solar enclosure as part of energy-efficient house. *Eastern-European Journal of Enterprise Technologies, 2 (8 (98))*, 38–45. doi: https://doi.org/10.15587/1729-4061.2019.160882
17. Kareem, M. W., Habib, K., Pasha, A. A., Irshad, K., Afolabi, L. O., Saha, B. B. (2022). Experimental study of multi-pass solar air thermal collector system assisted with sensible energy-storing matrix. *Energy, 245*. doi: https://doi.org/10.1016/j.energy.2022.123153
18. Francesconi, M., Antonelli, M., Desideri, U. (2023). Assessment of the optical efficiency in solar collectors: Experimental method for a concentrating solar power. *Thermal Science and Engineering Progress, 40*, 101740. doi: https://doi.org/10.1016/j.tsep.2023.101740
19. Hamdan, M. A., Abdelhafez, E., Ahmad, R., Aboushi, A. R. (2014). Solar Thermal Hybrid Heating System. *Energy Sustainability and Water Resource Management for Food Security in the Arab Middle East*. Beirut, Lebanon, 1–11.

✉***Stepan Mysak,*** *PhD, Senior Lecturer, Department of Heat Power Engineering of Thermal and Nuclear Power Plants, Lviv Polytechnic National University, Lviv, Ukraine, e-mail: stepan.y.mysak@lpnu.ua, ORCID: https://orcid.org/0000-0003-2064-7015*

Stepan Shapoval, *Doctor of Technical Sciences, Professor, Department of Heat and Gas Supply and Ventilation, Lviv Polytechnic National University, Lviv, Ukraine, ORCID: https://orcid.org/0000-0003-4985-0930*

✉*Corresponding author*